LARA PROJECT

TECHNICAL PQR AND TECHNICAL SPECS

PRE-QUALIFICATION REQUIREMENT (TECHNICAL)

	CONTROL VALVES WITH ACCESSORIES	PE-PQ-508-145-H001	
		DATE	24/12/2024
	2 X 800 MW LARA TPS STAGE-II	REV NO	00

1.0	Bidder should be Original equipment manufacturer (OEM) for CONTROL VALVES. In case bidder is not the OEM, evaluation shall be done as following :- (i) If bidder happens to be an Indian subsidiary of foreign OEM, then credentials of foreign OEM can be considered for meeting the PQR. (ii) If bidder happens to be authorised channel partner or has a valid collaboration agreement/licensing agreement with some other company or being a Joint Venture company, then the credentials of collaborator/licensing company/Principal company/JV partner can also be considered for meeting PQR as per the scope of work. The scope matrix shall include their respective roles including design vetting, manufacturing of critical component and warranty/ guarantee. If bidder qualifies on the basis of credentials of their principal/ JV partner/ Collaborator etc., then the principal/ JV partner/ Collaborator shall be responsible for overall design vetting and warranty/ guarantee of the package.
2.0	The Product being offered by the bidder should be in use successfully in power plant or any other industrial application for at least 1 (One) year. Bidder to submit either of following supporting documents for the product (control valve) with the following parameters:- (i) Minimum valve size = 4” (ii) Minimum pressure rating = ANSI #300 Copy of minimum 1 (One) Performance Certificate from end user / Customer certifying that product is running successfully for 1 (One) year from date of commissioning. The certificate should clearly indicate date of commissioning, date of issue of certificate and name/designation of the certificate issuer. Copy of purchase order & technical parameters to be attached along with the performance certificate. The date of satisfactory performance feedback certificate should not be later than the date of subject enquiry/NIT. OR Copy of repeat orders from minimum 2 (Two) different purchasers. Order received by supplier from same purchaser with a gap of minimum 2 (Two) years shall be considered as repeat order. Copy of technical parameters for each order to be attached. The date of repeat order should not be later than the date of subject enquiry/NIT.
3.0	Bidder to furnish experience list of last 5 years indicating customer name, purchase order reference, item supplied & year of supply to establish the continuity of business.
4.0	Bidder to submit all supporting documents in English. If documents submitted by bidder are in language other than English, a self-attested English translated document should also be submitted.
5.0	Notwithstanding anything stated above, BHEL reserves the right to assess the capabilities and capacity of the bidders/collaborators to perform the contract, should the circumstances warrant such assessment in the overall interest of BHEL.
6.0	Consideration of offer shall be subject to customer’s approval of bidders.
7.0	After satisfactory fulfilment of all the above criteria/ requirement, offer shall be considered for further evaluation as per NIT and all the other terms of the tender.

PREPARED BY	REVIEWED BY	APPROVED BY
SANDHYA BASWAL (MGR)	1 CHETAN MALIK (SR. MGR)	SURESH CHAND SHARMA (SR. DGM)

	TECHNICAL SPECIFICATION & DATA SHEET FOR CONTROL VALVE WITH ACCESSORIES (PNEUMATICALLY OPERATED)	Specification No.: PE-TS-508-145-H104
		Rev. No. 00
		Date : 30.12.24

TECHNICAL SPECIFICATION

FOR
CONTROL VALVES
WITH ACCESSORIES (OTHER THAN FDV-14)

2 X 800 MW LARA THERMAL POWER PLANT
(STAGE-II)

SPECIFICATION No. PE-TS-508-145-H104

BHARAT HEAVY ELECTRICALS LIMITED
POWER SECTOR
PROJECT ENGINEERING MANAGEMENT DIVISION
NOIDA, INDIA

File No. PEM-PG0MM(24)/1/2025-PS-PEM-PGI-1 (Computer No. 134626)
Generated from eOffice by Manoj Bhardwaj, ENGINEER(MB)-PG I-1-PS-PEM, ENGINEER, BHARAT HEAVY ELECTRICAL LTD on 07/01/2025 03:39 pm

बी एच ई एल BHEL	TECHNICAL SPECIFICATION & DATA SHEET FOR CONTROL VALVE WITH ACCESSORIES (PNEUMATICALLY OPERATED)	Specification No.: PE-TS-508-145-H104
		Rev. No. 00
		Date : 30.12.24

INDEX

Sl No.	DESCRIPTION	PAGE NO.
1	SCOPE	3
2	GENERAL TECHNICAL REQUIREMENTS	4
3	E-LEARNING MODULE	6
4	DATA SHEET	9
5	DATA SHEET FOR CONTROL VALVE ACCESSORIES	36
6	QUALITY PLAN	37
7	CONTROL VALVE HOOK UP DIAGRAM	45
8	SPECIFICATION FOR SMART POSITIONER	50
9	BILL OF QUANTITY (BOQ)	51
10	BILL OF QUANTITY (BOQ)-MANDATORY SPARES	52
11	PAINTING & PACKING	53
12	DOCUMENT REQUIRED	55
13	DATASHEET TO BE FILLED BY BIDDER	56
14	COMPLIANCE CERTIFICATE	57

बी एच ई एल BHEL	TECHNICAL SPECIFICATION & DATA SHEET FOR CONTROL VALVE WITH ACCESSORIES (PNEUMATICALLY OPERATED)	Specification No.: PE-TS-508-145-H104
		Rev. No. 00
		Date : 30.12.24

SCOPE

CONTROL VALVES COMPLETE WITH POSITIONER AND ALL ACCESSORIES MOUNTED, TUBED AND TERMINATED ON JB:		
1	SUPPLY INCLUDING DESIGN, ENGINEERING & MANUFACTURING	YES
2	INSPECTION & TESTING INCLUDING CV TEST	YES
3	ERECTION & COMMISSIONING	NO
4	SUPERVISION OF ERECTION & COMMISSIONING	NO
5	COMMISSIONING SPARES	YES
6	MANDATORY SPARES	YES
7	O & M SPARES	NO
8	PACKING	YES
9	PAINTING	YES
10	TRANSPORTATION & DELIVERY TO SITE	YES

	TECHNICAL SPECIFICATION & DATA SHEET FOR CONTROL VALVE WITH ACCESSORIES (PNEUMATICALLY OPERATED)	**Specification No.: PE-TS-999-145-H104** **Rev. No. 00** **Date : 30.12.24**

	GENERAL TECHNICAL REQUIREMENT
1	It is not the intent to specify herein all the details of design and manufacturing. The equipment shall conform in all respects to high standards of design, engineering and workmanship and shall be capable of performing the required duties in a manner acceptable to purchaser who will interpret the meaning of drawings and specifications and shall be entitled to reject any work or material which in his judgement is not in full accordance herewith.
2	Bidder shall also ensure that the offered equipment shall comply with all applicable statutory and regulatory requirements.
3	In the event of any conflict between the requirements of two clauses of this specification, documents or requirements of different codes and standards specified, the more stringent requirement as per the interpretation of the owner shall apply.
4	Drawing/document submission shall be through web based Document Management System(DMS) of BHEL. Bidder would be provided access to the DMS for drawing/document submission. Bidder to ensure internet connectivity of min speed of 2Mbps at their end.
5	Drawings/ documents submitted by vendor at any stage shall be complete in all respects. Any incomplete drawing submitted shall be treated as non-submission with delays attributable to vendor. For any clarification/ discussion required to complete the drawings, the bidder shall depute his personnel to BHEL / Customer's Office as per the requirement for across the table submission/ finalization of drawings.
6	Trim and body material has been specified in the respective data sheet. However, any substitute material if recommended by the manufacturer shall be either equivalent or superior to those specified and can be provided if found technically acceptable without any commercial and delivery impact.
7	In case bidder is not able to offer the required characteristics due to design considerations, modified Trim (Mod.EQ percentage or Mod. linear) can be offered subject to BHEL acceptance.
8	E- Learning Module shall be supplied by bidder as per Details provided in specification.
9	Bidder shall submit Quality Plan in the event of order based on the Quality Plan enclosed herein. QP will be subject to BHEL / CUSTOMER approval & customer hold points for inspection / testing shall be marked in the QP at the contract stage.
10	In case, the bidder is sourcing the item/any component from outside India, the third party inspection shall be arranged by bidder at their cost and shall be deemed to be considered by the bidder in their offer without any delivery impact.
11	Any change in valve size, percentage opening etc., if desired by BHEL / customer during approval of the documents after award of contract, within the gamut of tender specification, same shall be carried out by bidder without any commercial and delivery impact.
12	Sub vendor list is attached. Any additional sub - vendors proposed by bidder during contract stage shall be subject to BHEL/ Customer approval in the event of order without any commercial and delivery impact.
13	Mandatory Spares :
13.1	Wherever the quantities have been indicated for each type, size, thickness, material, radius, range etc., these shall cover all the items supplied and installed and the breakup for these shall be furnished in the bid. In case spares indicated in the list are not applicable to the particular design offered by the bidder, the bidder should offer spares applicable to offered design with quantities generally in line with the approach followed in the mandatory spare list
13.2	Any item which is quoted as "not applicable" in the spare list and is found to be "applicable" at a later date shall be supplied by the Bidder without any commercial implications.
13.3	Each spare shall be clearly marked and labeled on the outside of the packing with its description. When more than one spare part is packed in single case, a general description of the contents shall be shown on the outside of such case and a detailed list enclosed. All cases, containers and other packages must be suitably marked and numbered for the purpose of identification.
14	Nameplates shall be manufactured from stainless steel or aluminium with a matte or satin finish, and engraved with black lettering of a minimum 6 mm height or as per equipment standard whichever is higher.
15	Document approval by BHEL / Customer shall not absolve the supplier of their contractual obligations of completing the work as per specification requirement without any commercial and delivery impact.
16	Equipment must be safe, reliable and easy to maintain at all operating conditions.

	TECHNICAL SPECIFICATION & DATA SHEET FOR CONTROL VALVE WITH ACCESSORIES (PNEUMATICALLY OPERATED)	Specification No.: PE-TS-999-145-H104 Rev. No. 00 Date : 30.12.24
	GENERAL TECHNICAL REQUIREMENT	
17	The control valves shall be designed as per the latest version of the following codes/Standards :-	
17.1	Control Valve Sizing :	ISA S-75
17.2	Pressure / Temperature Rating :	ANSI-B16.34
17.3	Seat Leakage :	ANSI/FCI 70.2
17.4	Noise :	IEC 60534-4
17.5	End Connection: Butt Weld	ANSI B16.25
17.6	End Connection: Socket Weld	ANSI B16.11
17.7	End Connection: Flanged End	ANSI B16.5
17.8	End To End Tolerance :	ANSI B16.10
18	The Control valve, Actuator and the accessories opertaing conditions	Continuous operation under an ambient temperature : 0-60°C, Relative Humidity : 0-95%.
19	Valve Selection Criteria :	
19.1	Valve Opening at maximum flow conditions	not greater than 80% of total Valve stem travel
19.2	Valve Opening at minimum flow conditions	not less than 10% of total Valve stem travel
19.3	Stem travel from minimum flow to maximum flow	not less than 50% of total Valve stem travel
19.4	Flow capability	120% of maximum flow
20	Trim requirement for cavitation / flashing service	Anticavitation Trim/ Hardened Trim
21.1	Bonnet joints type	Flanged and Bolted
21.2	Type of Bonnet when fliud temperature is greater than 280 deg. C	Extended Bonnets
22.1	Plug Type	Plug shall be of one-piece construction cast, forged or machined from solid bar stock, BALANCED type
22.2	Plug connection with stem	Plug shall be screwed and pinned to valve stems or shall be integral with the valve stems.
23	Control Valve Guide type	High lift cage guided plugs
24	Trim type	Quick-change
25	Noise abatement method	The noise abatement shall be achieved by valve body and trim design and not by use of silencers except for few cases as per contractor's standard and proven practice subject to employer's approval.
26.1	Scope of Expander/Reducer between valve body and pipe	BHEL
26.2	Scope of Expander/Reducer between valve body diffuser, cartridge, silencer	Bidder
27	Flow action for vacuum application	Above the Seat
28	Painting Details	Refer Specification
29	Packing Details	Refer Specification
30	Valve actuators and stems shall be adequate to handle the unbalanced forces occurring under the specified flow conditions or the maximum differential pressure specified. An adequate allowance for stem force, at least 0.15 Kg/sq.cm. per linear millimeter of seating surface, shall be provided in the selection of the actuator.	

CLAUSE NO.	GENERAL TECHNICAL REQUIREMENTS
e- Learning package: e- Learning package shall be supplied for CONTROL VALVES	
8.03.05.03	These packages shall be installed on the Learning Management Server (LMS) of Power Management Institute (PMI), NTPC located at Noida. The Engineer- In-Charge (EIC) for the e-learning modules shall be from PMI. **1.** The objective of the e-Learning package consisting of courses for erection, commissioning, operation and maintenance of equipment / system as specified above is to facilitate the employees to have first hand information / requirement with respect to above activities for the supplied equipment / system . **2.** The bidder shall submit e-learning courses each for erection, commissioning, operation and maintenance of each of the equipment / system supplied as above. **a.** The erection course(s) should include instructions on pre-checks, prerequisites, erection strategy, erection procedure etc. **b.** The commissioning course(s) should include instructions on pre-commissioning, commissioning, initial operation etc. **c.** The operation course(s) should include instructions on the permissive, interlocks, physical check-ups, start-up, shutdown and protections etc. **d.** The maintenance course(s) should include instructions on predictive, preventive, breakdown and overhauling. Depth of coverage of above courses shall be as specified for **"Instruction Manuals"** in above clauses. A literature on caution / safety while handling equipment / system for the above modules shall follow the description of the said equipment /system. **3.** The e-Learning packages on equipment / system shall be installed by the vendor and shall be successfully test run in the presence of EIC or

CLAUSE NO.	GENERAL TECHNICAL REQUIREMENTS
	representative before acceptance by NTPC. The vendor will also give the master copy in form of Flash Drive/CD/DVD. The respective module for erection & commissioning shall be delivered and successfully test run at least three months before the scheduled start of the corresponding activity at site. The respective module for operation & maintenance shall be delivered and successfully test run at least three months before scheduled first synchronization of first unit. **4. e-Learning course broad requirements:** **a.** The courses shall be web based and mobile based Application type. It shall run on all possible versions of web browser like Internet Explorer, Google Chrome, Firefox etc. on Laptop/Desktop and shall be Smartphone/Tablet/Mobile responsive. The Mobile responsive courses shall run on Android, Windows Mobile, Blackberry, iOS etc. **b.** The courses shall support liquid/fluid page layout so that the entire screen gets adjusted to PC, Laptop, Smartphone/Mobile, Tablet and any other display devices. **c.** Course content text shall be in English language and be associated with a voiceover in English language with Indian accent. **d.** Courses shall be SCORM (Sharable Content Object Reference Model) compliant, version 1.2 which is compatible with LMS at PMI. **e.** Each course shall have every physical and functional detail of the equipment / system supplied. **f.** Each of the e-Learning course shall be based on multiple web pages and mobile pages with multiple modules. **g.** There shall be option for self-assessment test after every course. In case the user doesn't opt for self-assessment test the user shall be able to go to the next course. There shall be no restriction in no. of times for repeating the assessments. All correct answers along with the answers marked by the users shall be displayed at the end of test/quiz. **h.** If Java and Flash, as applicable are not available in the system to run the package, then there shall be a prompt message for updation of the same. **i.** Each course shall have a self-running interactive content with navigation buttons containing forward, backward, pause, bookmark and menu options in the course window. **j.** The course shall contain chapter titled 'Introduction/overview' that explains the purpose of the course. **k.** The course content shall contain descriptive text shall be factual, specific, terse, clearly worded, and simply illustrative, so that the user can understand it.

CLAUSE NO.	GENERAL TECHNICAL REQUIREMENTS
	l. The system shall provide the user with the ability to select the information with a Cursor. **m.** The course menu should contain table of content linked to concerned pages. The user shall be given the capability to access all of the functions available on the system through a menu system. This shall consist of active buttons, which shall control a hierarchy of pull down/pop-up menus. Menu shall appear quickly and exist only while a selection is being made. The user shall be given the capability to position the cursor or pointer on the menu item and use pointer device such as mouse to activate the function. **n.** Every course shall contain the 3D design/drawing/exploded view/360^0 turn around view of the equipment/system, textual description of the equipment/system and its functionality with video (as applicable), animation and audio. **o.** The users shall be able to control audio sound level associated with the courses. **p.** Drawings / text in the courses shall be scalable (Zoom In/ Out). **q.** The user shall have the capability to record a **bookmark** to mark displayed information for later recall, whenever he accesses the same course next time. Notes: 1. e-learning Package of an equipment / system shall include e-learning courses for each of erection, commissioning, operation and maintenance of that equipment / system. 2. e-learning courses on erection, commissioning, operation and maintenance of an equipment / system shall include e-learning lessons/chapters/modules (as required) for erection, commissioning, operation and maintenance respectively of that equipment / system. 3. The vendor shall get the approval of one sample course from EIC before proceeding for further courses.

	TECHNICAL SPECIFICATION & DATA SHEET FOR CONTROL VALVE WITH ACCESSORIES (PNEUMATICALLY OPERATED)	Specification No.: PE-TS-508-145-H104			
		Rev. No. 00			
		Date :30.12.2024			
SPECIFICATION & DATA SHEET FOR CONTROL VALVE					
A. GENERAL INFORMATION					
1	TAG NUMBER / SERVICE	ASV-8		D/A PEGGING FROM AUX. STEAM HEADER	
2	LOCATION / DUTY	OUTDOOR		MODULATING	
B. DESIGN CODES & STANDARDS					
3	CODE / STANDARD	REFER SPECIFIC NOTES			
C. TECHNICAL PARAMETERS / DESIGN FEATURES					
4	PIPE SIZE (OD X THK) mm	INLET	273 X 9.27	OUTLET	508 X 9.53
5	PIPE MATERIAL INLET / OUTLET	SA 106 GR B		SA 106 GR B	
6	VALVE BODY TYPE / MATERIAL/ SIZE OF VALVE	GLOBE	A217WC6	BIDDER TO FURNISH	
7	GUIDING / NO. OF PORTS / TRIM FORM	CAGE	ONE	LINEAR	
8	CAGE TYPE / CAGE MATERIAL / GUIDE BUSH Material	LO-DB	SS 316 STELLITED	SS 316 STELLITED	
9	MATERIAL: PLUG / STEM / SEAT / YOKE	SS 316 STELLITED	SS 316 STELLITED	SS 316 STELLITED	CARBON STEEL
10	PACKING MATERIAL / NOS / TYPE	GRAFOIL	SINGLE	STANDARD	
11	END CONNECTION / ANSI RATING / BONNET TYPE	BWE	BIDDER TO FURNISH	EXTENDED	
12	VALVE OUTLET VELOCITY	< 150 M/SEC(STEAM)			
13	LEAKAGE CLASS / NOISE LEVEL (dBA)	IV		< 85 dBA	
14	VACUUM SERVICE / ANTI CAVITATION TRIM	NO		NO	
15	ACTUATOR TYPE	PNEUMATIC			
16	TRAVEL TIME FOR OPEN TO CLOSE, CLOSE TO OPEN	LESS THAN 10 SEC			
17	VALVE POSN. ON: ELECTRICAL SIGNAL FAILURE / SUPPLY AIR FAILURE	TO OPEN		STAYPUT	
18	SMART POSITIONER / POSITION LIMIT SWITCH	REQUIRED(PROFIBUS)		NOT REQUIRED	
19	POSITION TRANSMITTER / E/P CONVERTER	PART OF SMART POSITIONER		PART OF SMART POSITIONER	
20	AIR FILTER REGULATOR / AIR LOCK RELAY	REQUIRED		REQUIRED	
21	SOLENOID VALVE / JUNCTION BOX	NOT REQUIRED		REQUIRED	
22	HAND WHEEL (SIDE MOUNTED) / LOCAL POSITIONER INDICATOR	REQUIRED		REQUIRED	
23	SERVICE CONDITIONS	FLOW (T/HR)	INLET PR KG/CM2(A)	OUTLET PR. KG/CM2(A)	TEMP DEG. C
24	CASE-1 7.5 % BMCR	19	16	1.65	310
25	CASE-2 15 % BMCR(COLD)	37	16	1.65	310
26	CASE-3 15 % BMCR(HOT)	53	16	3.65	310
27	CASE-4 25 % BMCR(COLD)	62	16	1.65	310
28	CASE-5 40% COLD (CHECK CASE)	98	16	1.65	310
29	MAX SHUT OFF PRESSURE,BODY DESIGN PRESSURE (KG/CM2 (g)) ,TEMP (DEG C)	20		20	350
30	IBR FORM-IIIC	REQUIRED			
31	PROCESS CONDITION	HIGH DP			
32	MODEL OF CONTROL VALVE	BIDDER TO FURNISH			
33	SIZE OF CONTROL VALVE	BIDDER TO FURNISH			
D. GUARANTEED PERFORMANCE REQUIREMENTS					
34	LINEARITY / HYSTERISIS / SENSITIVITY / OVERALL ACCURACY	+/- 1%	+/- 1%	+/- 0.5%	+/- 2%

File No. PEM-PG0MM(24)/1/2025-PS-PEM-PGI-1 (Computer No. 134626)
Generated from eOffice by Manoj Bhardwaj, ENGINEER(MB)-PG I-1-PS-PEM, ENGINEER, BHARAT HEAVY ELECTRICAL LTD on 07/01/2025 03:39 pm

	TECHNICAL SPECIFICATION & DATA SHEET FOR CONTROL VALVE WITH ACCESSORIES (PNEUMATICALLY OPERATED)	Specification No.: PE-TS-508-145-H104			
		Rev. No. 00			
		Date :30.12.2024			
SPECIFICATION & DATA SHEET FOR CONTROL VALVE					
A. GENERAL INFORMATION					
1	TAG NUMBER / SERVICE	CRHV-6		D/A PEGGING FROM CRH LINE	
2	LOCATION / DUTY	OUTDOOR		MODULATING	
B. DESIGN CODES & STANDARDS					
3	CODE / STANDARD	REFER SPECIFIC NOTES			
C. TECHNICAL PARAMETERS / DESIGN FEATURES					
4	PIPE SIZE (OD X THK) mm	INLET	406.4 X 21.44	OUTLET	965 x 38
5	PIPE MATERIAL INLET / OUTLET	SA 106 GR C		SA 106 GR C	
6	VALVE BODY TYPE / MATERIAL/ SIZE OF VALVE	GLOBE	A217WC6	BIDDER TO FURNISH	
7	GUIDING / NO. OF PORTS / TRIM FORM	CAGE	ONE	LINEAR	
8	CAGE TYPE / CAGE MATERIAL / GUIDE BUSH Material	STANDARD	SS 316 STELLITED	SS 316 STELLITED	
9	MATERIAL: PLUG / STEM / SEAT / YOKE	SS 316 STELLITED	SS 316 STELLITED	SS 316 STELLITED	CARBON STEEL
10	PACKING MATERIAL / NOS / TYPE	GRAFOIL	SINGLE	STANDARD	
11	END CONNECTION / ANSI RATING / BONNET TYPE	BWE	BIDDER TO FURNISH	EXTENDED	
12	VALVE OUTLET VELOCITY	< 150 M/SEC(STEAM)			
13	LEAKAGE CLASS / NOISE LEVEL (dBA)	IV		< 85 dBA	
14	VACUUM SERVICE / ANTI CAVITATION TRIM	NO		NO	
15	ACTUATOR TYPE	PNEUMATIC			
16	TRAVEL TIME FOR OPEN TO CLOSE, CLOSE TO OPEN	LESS THAN 10 SEC			
17	VALVE POSN. ON: ELECTRICAL SIGNAL FAILURE / SUPPLY AIR FAILURE	TO CLOSE		STAYPUT	
18	SMART POSITIONER / POSITION LIMIT SWITCH	REQUIRED(PROFIBUS)		NOT REQUIRED	
19	POSITION TRANSMITTER / E/P CONVERTER	PART OF SMART POSITIONER		PART OF SMART POSITIONER	
20	AIR FILTER REGULATOR / AIR LOCK RELAY	REQUIRED		REQUIRED	
21	SOLENOID VALVE / JUNCTION BOX	NOT REQUIRED		REQUIRED	
22	HAND WHEEL (SIDE MOUNTED) / LOCAL POSITIONER INDICATOR	REQUIRED		REQUIRED	
23	SERVICE CONDITIONS	FLOW (T/HR)	INLET PR KG/CM2(A)	OUTLET PR. KG/CM2(A)	TEMP DEG. C
24	CASE-1 65% BYPASS	241.6	38.39	3.65	360
25	CASE-2 15 % BMCR	53	20	3.65	355
26	CASE-3 HOUSE LOAD	241.6	38.39	3.65	360
27	CASE-4 START UP	82	13	1.55	252.2
28	MAX SHUT OFF PRESSURE,BODY DESIGN PRESSURE (KG/CM2 (g)), TEMP (DEG C)	76.2		76.2	387
29	IBR FORM-IIIC	REQUIRED			
30	PROCESS CONDITION	HIGH DP			
31	MODEL OF CONTROL VALVE	BIDDER TO FURNISH			
32	SIZE OF CONTROL VALVE	BIDDER TO FURNISH			
D. GUARENTEED PERFORMANCE REQUIREMENTS					
33	LINEARITY / HYSTERISIS / SENSITIVITY / OVERALL ACCURACY	+/- 1%	+/- 1%	+/- 0.5%	+/- 2%

बी एच ई एल BHEL	TECHNICAL SPECIFICATION & DATA SHEET FOR CONTROL VALVE WITH ACCESSORIES (PNEUMATICALLY OPERATED)	Specification No.: PE-TS-508-145-H104			
		Rev. No. 00			
		Date :30.12.2024			
SPECIFICATION & DATA SHEET FOR CONTROL VALVE					
A. GENERAL INFORMATION					
1	TAG NUMBER / SERVICE	CDV-25		LOW LOAD CONDENSATE CONTROL	
2	LOCATION / DUTY	INDOOR		MODULATING	
B. DESIGN CODES & STANDARDS					
3	CODE / STANDARD	REFER SPECIFIC NOTES			
C. TECHNICAL PARAMETERS / DESIGN FEATURES					
4	PIPE SIZE (OD X THK) mm	INLET	323.9 x 9.53	OUTLET	323.9 x 9.53
5	PIPE MATERIAL INLET / OUTLET	SA 106 GR B		SA 106 GR B	
6	VALVE BODY TYPE / MATERIAL / SIZE OF VALVE	GLOBE	A216WCB	BIDDER TO FURNISH	
7	GUIDING / NO. OF PORTS / TRIM FORM	CAGE	ONE	EQ %	
8	CAGE TYPE / CAGE MATERIAL / GUIDE BUSH Material	STANDARD	SS 316 STELLITED	SS 316 STELLITED	
9	MATERIAL: PLUG / STEM / SEAT / YOKE	SS 316 STELLITED	SS 316 STELLITED	SS 316 STELLITED	CARBON STEEL
10	PACKING MATERIAL / NOS / TYPE	GRAFOIL	SINGLE	STANDARD	
11	END CONNECTION / ANSI RATING / BONNET TYPE	BWE	BIDDER TO FURNISH	STANDARD	
12	VALVE OUTLET VELOCITY	< 7 M/SEC(WATER)			
13	LEAKAGE CLASS / NOISE LEVEL (dBA)	IV		< 85 dBA	
14	VACUUM SERVICE / ANTI CAVITATION TRIM	NO		NO	
15	ACTUATOR TYPE	PNEUMATIC			
16	TRAVEL TIME FOR OPEN TO CLOSE, CLOSE TO OPEN	LESS THAN 10 SEC			
17	VALVE POSN. ON: ELECTRICAL SIGNAL FAILURE / SUPPLY AIR FAILURE	TO OPEN		STAYPUT	
18	SMART POSITIONER / POSITION LIMIT SWITCH	REQUIRED(HART)		NOT REQUIRED	
19	POSITION TRANSMITTER / E/P CONVERTER	PART OF SMART POSITIONER		PART OF SMART POSITIONER	
20	AIR FILTER REGULATOR / AIR LOCK RELAY	REQUIRED		REQUIRED	
21	SOLENOID VALVE / JUNCTION BOX	NOT REQUIRED		REQUIRED	
22	HAND WHEEL (SIDE MOUNTED) / LOCAL POSITIONER INDICATOR	REQUIRED		REQUIRED	
23	SERVICE CONDITIONS	FLOW (T/HR)	INLET PR KG/CM2(A)	OUTLET PR. KG/CM2(A)	TEMP DEG. C
24	CASE-1 Min. (10% TMCR flow)	165.37	20	4.9	48.7
25	CASE-2 30% TMCR	592.7	20	9.1	48.7
27	CASE-3 50% TMCR	812.7	20	12.6	47.9
29	CASE-4 65% TMCR	1028	20	15	47.5
30	CASE-5 80% TMCR (CHECK CASE)	1246	21.74	18.74	47.2
30	CASE-6 HP/LP BYPASS(CHECK CASE)	1656	34	25	47
31	MAX SHUT OFF PRESSURE,BODY DESIGN PRESSURE (KG/CM2 (g)), TEMP (DEG C)	45		45	55
32	IBR FORM-IIIC	NOT REQUIRED			
33	PROCESS CONDITION	--			
34	MODEL OF CONTROL VALVE	BIDDER TO FURNISH			
35	SIZE OF CONTROL VALVE	BIDDER TO FURNISH			
D. GUARENTEED PERFORMANCE REQUIREMENTS					
36	LINEARITY / HYSTERISIS / SENSITIVITY / OVERALL ACCURACY	+/- 1%	+/- 1%	+/- 0.5%	+/- 2%

	TECHNICAL SPECIFICATION & DATA SHEET FOR CONTROL VALVE WITH ACCESSORIES (PNEUMATICALLY OPERATED)	Specification No.: PE-TS-508-145-H104			
		Rev. No. 00			
		Date :30.12.2024			
SPECIFICATION & DATA SHEET FOR CONTROL VALVE					
A. GENERAL INFORMATION					
1	TAG NUMBER / SERVICE	CDV-39		GSC/CEP MIN. FLOW RECIRCULATION	
2	LOCATION / DUTY	INDOOR		MODULATING	
B. DESIGN CODES & STANDARDS					
3	CODE / STANDARD	REFER SPECIFIC NOTES			
C. TECHNICAL PARAMETERS / DESIGN FEATURES					
4	PIPE SIZE (OD X THK) mm	INLET	219.1 X 12.7	OUTLET	219.1 X 12.7
5	PIPE MATERIAL INLET / OUTLET	SA 106 GR B		SA 106 GR B	
6	VALVE BODY TYPE / MATERIAL / SIZE OF VALVE	GLOBE	A217WC9	BIDDER TO FURNISH	
7	GUIDING / NO. OF PORTS / TRIM FORM	CAGE	ONE	EQ %	
8	CAGE TYPE / CAGE MATERIAL / GUIDE BUSH Material	ANTI-CAVITATION	17-4 PH SS	17-4 PH SS	
9	MATERIAL: PLUG / STEM / SEAT / YOKE	17-4 PH SS	17-4 PH SS	17-4 PH SS	CARBON STEEL
10	PACKING MATERIAL / NOS / TYPE	GRAFOIL	DOUBLE	V-CHEVRON	
11	END CONNECTION / ANSI RATING / BONNET TYPE	BWE	BIDDER TO FURNISH	STANDARD	
12	VALVE OUTLET VELOCITY	< 7 M/SEC(WATER)			
13	LEAKAGE CLASS / NOISE LEVEL (dBA)	V		< 85 dBA	
14	VACUUM SERVICE / ANTI CAVITATION TRIM	YES		YES	
15	ACTUATOR TYPE	PNEUMATIC			
16	TRAVEL TIME FOR OPEN TO CLOSE, CLOSE TO OPEN	LESS THAN 10 SEC			
17	VALVE POSN. ON: ELECTRICAL SIGNAL FAILURE / SUPPLY AIR FAILURE	TO OPEN		STAYPUT	
18	SMART POSITIONER / POSITION LIMIT SWITCH	REQUIRED(PROFIBUS)		NOT REQUIRED	
19	POSITION TRANSMITTER / E/P CONVERTER	PART OF SMART POSITIONER		PART OF SMART POSITIONER	
20	AIR FILTER REGULATOR / AIR LOCK RELAY	REQUIRED		REQUIRED	
21	SOLENOID VALVE / JUNCTION BOX	NOT REQUIRED		REQUIRED	
22	HAND WHEEL (SIDE MOUNTED) / LOCAL POSITIONER INDICATOR	REQUIRED		REQUIRED	
23	SERVICE CONDITIONS (LOAD)	FLOW (T/HR)	INLET PR KG/CM2(A)	OUTLET PR. KG/CM2(A)	TEMP DEG. C
24	GSC Min Flow R/C	32.4	20	0.61	46.8
25	Min R/C at Max. speed	324	40	0.6	46.8
26	Max Capability(CHECK CASE)	640	20	0.6	46.8
27	MAX SHUT OFF PRESSURE,BODY DESIGN PRESSURE (KG/CM2 (g)), TEMP (DEG C)	45		45	55
28	IBR FORM-IIIC	NOT REQUIRED			
29	PROCESS CONDITION	HIGH DP,CAVITATION			
30	MODEL OF CONTROL VALVE	BIDDER TO FURNISH			
31	SIZE OF CONTROL VALVE	BIDDER TO FURNISH			
D. GUARENTEED PERFORMANCE REQUIREMENTS					
32	LINEARITY / HYSTERISIS / SENSITIVITY / OVERALL ACCURACY	+/- 1%	+/- 1%	+/- 0.5%	+/- 2%

	TECHNICAL SPECIFICATION & DATA SHEET FOR CONTROL VALVE WITH ACCESSORIES (PNEUMATICALLY OPERATED)	Specification No.: PE-TS-508-145-H104			
		Rev. No. 00			
		Date :30.12.2024			
SPECIFICATION & DATA SHEET FOR CONTROL VALVE					
A. GENERAL INFORMATION					
1	TAG NUMBER / SERVICE	CDV-65,CDV-67,CDV-69		CEP-A,B,C MIN FLOW RECIRCULATION	
2	LOCATION / DUTY	INDOOR		MODULATING	
B. DESIGN CODES & STANDARDS					
3	CODE / STANDARD	REFER SPECIFIC NOTES			
C. TECHNICAL PARAMETERS / DESIGN FEATURES					
4	PIPE SIZE (OD X THK) mm	INLET	168.3 x 7.11	OUTLET	168.3 x 7.11
5	PIPE MATERIAL INLET / OUTLET	SA 106 GR B		SA 106 GR B	
6	VALVE BODY TYPE / MATERIAL / SIZE OF VALVE	GLOBE	A217WC9	BIDDER TO FURNISH	
7	GUIDING / NO. OF PORTS / TRIM FORM	CAGE	ONE	EQ %	
8	CAGE TYPE / CAGE MATERIAL / GUIDE BUSH Material	ANTI-CAVITATION	17-4 PH SS	17-4 PH SS	
9	MATERIAL: PLUG / STEM / SEAT / YOKE	17-4 PH SS	17-4 PH SS	17-4 PH SS	CARBON STEEL
10	PACKING MATERIAL / NOS / TYPE	GRAFOIL	DOUBLE	V-CHEVRON	
11	END CONNECTION / ANSI RATING / BONNET TYPE	BWE	BIDDER TO FURNISH	STANDARD	
12	VALVE OUTLET VELOCITY	< 7 M/SEC(WATER)			
13	LEAKAGE CLASS / NOISE LEVEL (dBA)	V		< 85 dBA	
14	VACUUM SERVICE / ANTI CAVITATION TRIM	YES		YES	
15	ACTUATOR TYPE	PNEUMATIC			
16	TRAVEL TIME FOR OPEN TO CLOSE, CLOSE TO OPEN	LESS THAN 10 SEC			
17	VALVE POSN. ON: ELECTRICAL SIGNAL FAILURE / SUPPLY AIR FAILURE	TO OPEN		STAYPUT	
18	SMART POSITIONER / POSITION LIMIT SWITCH	REQUIRED(HART)		NOT REQUIRED	
19	POSITION TRANSMITTER / E/P CONVERTER	PART OF SMART POSITIONER		PART OF SMART POSITIONER	
20	AIR FILTER REGULATOR / AIR LOCK RELAY	REQUIRED		REQUIRED	
21	SOLENOID VALVE / JUNCTION BOX	REQUIRED		REQUIRED	
22	HAND WHEEL (SIDE MOUNTED) / LOCAL POSITIONER INDICATOR	REQUIRED		REQUIRED	
23	SERVICE CONDITIONS (LOAD)	FLOW (T/HR)	INLET PR KG/CM2(A)	OUTLET PR. KG/CM2(A)	TEMP DEG. C
24	CEP Min flow R/C	32	21	0.6	46.3
25	Min Recir at Min. speed	318	21	0.6	46.3
26	Min Recir at Max. speed	318	42	0.6	46.3
27	MAX SHUT OFF PRESSURE,BODY DESIGN PRESSURE (KG/CM2 (g)), TEMP (DEG C)		45	45/VACCUM	55
28	IBR FORM-IIIC	NOT REQUIRED			
29	PROCESS CONDITION	HIGH DP,CAVITATION			
30	MODEL OF CONTROL VALVE	BIDDER TO FURNISH			
31	SIZE OF CONTROL VALVE	BIDDER TO FURNISH			
D. GUARENTEED PERFORMANCE REQUIREMENTS					
32	LINEARITY / HYSTERISIS / SENSITIVITY / OVERALL ACCURACY	+/- 1%	+/- 1%	+/- 0.5%	+/- 2%

File No. PEM-PG0MM(24)/1/2025-PS-PEM-PGI-1 (Computer No. 134626)
Generated from eOffice by Manoj Bhardwaj, ENGINEER(MB)-PG I-1-PS-PEM, ENGINEER, BHARAT HEAVY ELECTRICAL LTD on 07/01/2025 03:39 pm

	TECHNICAL SPECIFICATION & DATA SHEET FOR CONTROL VALVE WITH ACCESSORIES (PNEUMATICALLY OPERATED)	Specification No.: PE-TS-508-145-H104			
		Rev. No. 00			
		Date :30.12.2024			
SPECIFICATION & DATA SHEET FOR CONTROL VALVE					
A. GENERAL INFORMATION					
1	TAG NUMBER / SERVICE	CDV-43		EXCESS DUMP CONTROL	
2	LOCATION / DUTY	INDOOR		MODULATING	
B. DESIGN CODES & STANDARDS					
3	CODE / STANDARD	REFER SPECIFIC NOTES			
C. TECHNICAL PARAMETERS / DESIGN FEATURES					
4	PIPE SIZE (OD X THK) mm	INLET	323.9X9.53	OUTLET	323.9X9.53
5	PIPE MATERIAL INLET / OUTLET	SA 106 GR C		SA 106 GR C	
6	VALVE BODY TYPE / MATERIAL / SIZE OF VALVE	GLOBE	A216WCB	BIDDER TO FURNISH	
7	GUIDING / NO. OF PORTS / TRIM FORM	CAGE	ONE	EQ %	
8	CAGE TYPE / CAGE MATERIAL / GUIDE BUSH Material	STANDARD	SS 316 STELLITED	SS 316 STELLITED	
9	MATERIAL: PLUG / STEM / SEAT / YOKE	SS 316 STELLITED	SS 316 STELLITED	SS 316 STELLITED	CARBON STEEL
10	PACKING MATERIAL / NOS / TYPE	GRAFOIL	SINGLE	STANDARD	
11	END CONNECTION / ANSI RATING / BONNET TYPE	BWE	BIDDER TO FURNISH	STANDARD	
12	VALVE OUTLET VELOCITY	< 7 M/SEC(WATER)			
13	LEAKAGE CLASS / NOISE LEVEL (dBA)	V		< 85 dBA	
14	VACUUM SERVICE / ANTI CAVITATION TRIM	NO		NO	
15	ACTUATOR TYPE	PNEUMATIC			
16	TRAVEL TIME FOR OPEN TO CLOSE, CLOSE TO OPEN	LESS THAN 10 SEC			
17	VALVE POSN. ON: ELECTRICAL SIGNAL FAILURE / SUPPLY AIR FAILURE	TO OPEN		STAYPUT	
18	SMART POSITIONER / POSITION LIMIT SWITCH	REQUIRED(PROFIBUS)		NOT REQUIRED	
19	POSITION TRANSMITTER / E/P CONVERTER	PART OF SMART POSITIONER		PART OF SMART POSITIONER	
20	AIR FILTER REGULATOR / AIR LOCK RELAY	REQUIRED		REQUIRED	
21	SOLENOID VALVE / JUNCTION BOX	NOT REQUIRED		REQUIRED	
22	HAND WHEEL (SIDE MOUNTED) / LOCAL POSITIONER INDICATOR	REQUIRED		REQUIRED	
23	SERVICE CONDITIONS (LOAD)	FLOW (T/HR)	INLET PR KG/CM2(A)	OUTLET PR. KG/CM2(A)	TEMP DEG. C
24	MIN FLOW	41	20	1.8	48.2
25	MIN SPEED	410	20	1.79	48.2
26	MAX SPEED	410	42	1.8	48.2
27	CHECK CASE(FOR FLEXIBLE OPERATION)	900	25	1.8	48.2
28	MAX SHUT OFF PRESSURE,BODY DESIGN PRESSURE (KG/CM2 (g)), TEMP (DEG C)		45	45	55
29	IBR FORM-IIIC	NOT REQUIRED			
30	PROCESS CONDITION	HIGH DP			
31	MODEL OF CONTROL VALVE	BIDDER TO FURNISH			
32	SIZE OF CONTROL VALVE	BIDDER TO FURNISH			
D. GUARENTEED PERFORMANCE REQUIREMENTS					
33	LINEARITY / HYSTERISIS / SENSITIVITY / OVERALL ACCURACY	+/- 1%	+/- 1%	+/- 0.5%	+/- 2%

File No. PEM-PG0MM(24)/1/2025-PS-PEM-PGI-1 (Computer No. 134626)
Generated from eOffice by Manoj Bhardwaj, ENGINEER(MB)-PG I-1-PS-PEM, ENGINEER, BHARAT HEAVY ELECTRICAL LTD on 07/01/2025 03:39 pm

	TECHNICAL SPECIFICATION & DATA SHEET FOR CONTROL VALVE WITH ACCESSORIES (PNEUMATICALLY OPERATED)	Specification No.: PE-TS-508-145-H104			
		Rev. No. 00			
		Date :30.12.2024			
SPECIFICATION & DATA SHEET FOR CONTROL VALVE					
A. GENERAL INFORMATION					
1	TAG NUMBER / SERVICE	CDV-72		CONDENSATE FOR VALVE GLAND SEALING & F/T	
2	LOCATION / DUTY	INDOOR		MODULATING	
B. DESIGN CODES & STANDARDS					
3	CODE / STANDARD	REFER SPECIFIC NOTES			
C. TECHNICAL PARAMETERS / DESIGN FEATURES					
4	PIPE SIZE (OD X THK) mm	INLET	60.3 x 5.54	OUTLET	60.3 x 5.54
5	PIPE MATERIAL INLET / OUTLET	SA 106 GR B		SA 106 GR B	
6	VALVE BODY TYPE / MATERIAL / SIZE OF VALVE	GLOBE	A216WCB	BIDDER TO FURNISH	
7	GUIDING / NO. OF PORTS / TRIM FORM	CAGE	ONE	EQ %	
8	CAGE TYPE / CAGE MATERIAL / GUIDE BUSH Material	STANDARD	SS 316 STELLITED	SS 316 STELLITED	
9	MATERIAL: PLUG / STEM / SEAT / YOKE	SS 316 STELLITED	SS 316 STELLITED	SS 316 STELLITED	CARBON STEEL
10	PACKING MATERIAL / NOS / TYPE	GRAFOIL	SINGLE	STANDARD	
11	END CONNECTION / ANSI RATING / BONNET TYPE	BWE	BIDDER TO FURNISH	STANDARD	
12	FLOW ACTION / VALVE OUTLET VELOCITY	< 7 M/SEC(WATER)			
13	LEAKAGE CLASS / NOISE LEVEL (dBA)	V		< 85 dBA	
14	VACUUM SERVICE / ANTI CAVITATION TRIM	NO		NO	
15	ACTUATOR TYPE	PNEUMATIC			
16	TRAVEL TIME FOR OPEN TO CLOSE, CLOSE TO OPEN	LESS THAN 10 SEC			
17	VALVE POSN. ON: ELECTRICAL SIGNAL FAILURE / SUPPLY AIR FAILURE	TO OPEN		STAYPUT	
18	SMART POSITIONER / POSITION LIMIT SWITCH	REQUIRED(PROFIBUS)		NOT REQUIRED	
19	POSITION TRANSMITTER / E/P CONVERTER	PART OF SMART POSITIONER		PART OF SMART POSITIONER	
20	AIR FILTER REGULATOR / AIR LOCK RELAY	REQUIRED		REQUIRED	
21	SOLENOID VALVE / JUNCTION BOX	NOT REQUIRED		REQUIRED	
22	HAND WHEEL (SIDE MOUNTED) / LOCAL POSITIONER INDICATOR	REQUIRED		REQUIRED	
23	SERVICE CONDITIONS (LOAD)	FLOW (T/HR)	INLET PR KG/CM2(A)	OUTLET PR. KG/CM2(A)	TEMP DEG. C
24	Min Condensate to Valve GS	4	20	1.1	47.3
25	MIN.	10	20	2.61	47.3
26	MAX.	10	42	2.61	47.3
27	MAX SHUT OFF PRESSURE,BODY DESIGN PRESSURE (KG/CM2 (g)), TEMP (DEG C)	45		45	55
28	IBR FORM-IIIC	NOT REQUIRED			
29	PROCESS CONDITION				
30	MODEL OF CONTROL VALVE	BIDDER TO FURNISH			
31	SIZE OF CONTROL VALVE	BIDDER TO FURNISH			
D. GUARENTEED PERFORMANCE REQUIREMENTS					
32	LINEARITY / HYSTERISIS / SENSITIVITY / OVERALL ACCURACY	+/- 1%	+/- 1%	+/- 0.5%	+/- 2%

	TECHNICAL SPECIFICATION & DATA SHEET FOR CONTROL VALVE WITH ACCESSORIES (PNEUMATICALLY OPERATED)	Specification No.: PE-TS-508-145-H104			
		Rev. No. 00			
		Date :30.12.2024			
SPECIFICATION & DATA SHEET FOR CONTROL VALVE					
A. GENERAL INFORMATION					
1	TAG NUMBER / SERVICE	CDV-84		CONDENSATE SPRAY FOR F/T	
2	LOCATION / DUTY	INDOOR		ON/OFF	
B. DESIGN CODES & STANDARDS					
3	CODE / STANDARD	REFER SPECIFIC NOTES			
C. TECHNICAL PARAMETERS / DESIGN FEATURES					
4	PIPE SIZE (OD X THK) mm	INLET	33.4 x 4.55	OUTLET	33.4 x 4.55
5	PIPE MATERIAL INLET / OUTLET	SA 106 GR B		SA 106 GR B	
6	VALVE BODY TYPE / MATERIAL / SIZE OF VALVE	GLOBE	A217WC9	BIDDER TO FURNISH	
7	GUIDING / NO. OF PORTS / TRIM FORM	CAGE	ONE	ON-OFF(QUICK OPEN)	
8	CAGE TYPE / CAGE MATERIAL / GUIDE BUSH Material	ANTI-CAVITATION	SS 316 STELLITED	SS 316 STELLITED	
9	MATERIAL: PLUG / STEM / SEAT / YOKE	SS 316 STELLITED	SS 316 STELLITED	SS 316 STELLITED	CARBON STEEL
10	PACKING MATERIAL / NOS / TYPE	GRAFOIL	DOUBLE	V-CHEVRON	
11	END CONNECTION / ANSI RATING / BONNET TYPE	BWE	BIDDER TO FURNISH	STANDARD	
12	FLOW ACTION / VALVE OUTLET VELOCITY	< 7 M/SEC(WATER)			
13	LEAKAGE CLASS / NOISE LEVEL (dBA)	V		< 85 dBA	
14	VACUUM SERVICE / ANTI CAVITATION TRIM	YES		YES	
15	ACTUATOR TYPE	PNEUMATIC			
16	TRAVEL TIME FOR OPEN TO CLOSE, CLOSE TO OPEN	LESS THAN 10 SEC			
17	VALVE POSN. ON: ELECTRICAL SIGNAL FAILURE / SUPPLY AIR FAILURE	TO OPEN		STAYPUT	
18	SMART POSITIONER / POSITION LIMIT SWITCH	NOT REQUIRED		REQUIRED	
19	POSITION TRANSMITTER / E/P CONVERTER	NOT REQUIRED		NOT REQUIRED	
20	AIR FILTER REGULATOR / AIR LOCK RELAY	REQUIRED		REQUIRED	
21	SOLENOID VALVE / JUNCTION BOX	REQUIRED		REQUIRED	
22	HAND WHEEL (SIDE MOUNTED) / LOCAL POSITIONER INDICATOR	REQUIRED		REQUIRED	
23	SERVICE CONDITIONS (LOAD)	FLOW (T/HR)	INLET PR KG/CM2(A)	OUTLET PR. KG/CM2(A)	TEMP DEG. C
25	MIN. SPEED	10	20	0.2	47.3
26	MAX. SPEED	10	42	0.2	47.3
27	MAX SHUT OFF PRESSURE,BODY DESIGN PRESSURE (KG/CM2 (g)), TEMP (DEG C)		45	45	55
28	IBR FORM-IIIC	NOT REQUIRED			
29	PROCESS CONDITION	CAVITATION, HIGH DP			
30	MODEL OF CONTROL VALVE	BIDDER TO FURNISH			
31	SIZE OF CONTROL VALVE	BIDDER TO FURNISH			
D. GUARENTEED PERFORMANCE REQUIREMENTS					
32	LINEARITY / HYSTERISIS / SENSITIVITY / OVERALL ACCURACY	NA	NA	NA	NA

	TECHNICAL SPECIFICATION & DATA SHEET FOR CONTROL VALVE WITH ACCESSORIES (PNEUMATICALLY OPERATED)	Specification No.: PE-TS-508-145-H104			
		Rev. No. 00			
		Date :30.12.2024			
SPECIFICATION & DATA SHEET FOR CONTROL VALVE					
A. GENERAL INFORMATION					
1	TAG NUMBER / SERVICE	CDV-94		CONDENSATE SPRAY FOR UNIT F/T	
2	LOCATION / DUTY	INDOOR		ON/OFF	
B. DESIGN CODES & STANDARDS					
3	CODE / STANDARD	REFER SPECIFIC NOTES			
C. TECHNICAL PARAMETERS / DESIGN FEATURES					
4	PIPE SIZE (OD X THK) mm	INLET	33.4 x 4.55	OUTLET	33.4 x 4.55
5	PIPE MATERIAL INLET / OUTLET	SA 106 GR B		SA 106 GR B	
6	VALVE BODY TYPE / MATERIAL / SIZE OF VALVE	GLOBE	A217WC9	BIDDER TO FURNISH	
7	GUIDING / NO. OF PORTS / TRIM FORM	CAGE	ONE	ON-OFF(QUICK OPEN)	
8	CAGE TYPE / CAGE MATERIAL / GUIDE BUSH Material	ANTI-CAVITATION	SS 316 STELLITED	SS 316 STELLITED	
9	MATERIAL: PLUG / STEM / SEAT / YOKE	SS 316 STELLITED	SS 316 STELLITED	SS 316 STELLITED	CARBON STEEL
10	PACKING MATERIAL / NOS / TYPE	GRAFOIL	DOUBLE	V-CHEVRON	
11	END CONNECTION / ANSI RATING / BONNET TYPE	BWE	BIDDER TO FURNISH	STANDARD	
12	FLOW ACTION / VALVE OUTLET VELOCITY	< 7 M/SEC(WATER)			
13	LEAKAGE CLASS / NOISE LEVEL (dBA)	V		< 85 dBA	
14	VACUUM SERVICE / ANTI CAVITATION TRIM	YES		YES	
15	ACTUATOR TYPE	PNEUMATIC			
16	TRAVEL TIME FOR OPEN TO CLOSE, CLOSE TO OPEN	LESS THAN 10 SEC			
17	VALVE POSN. ON: ELECTRICAL SIGNAL FAILURE / SUPPLY AIR FAILURE	TO OPEN		STAYPUT	
18	SMART POSITIONER / POSITION LIMIT SWITCH	NOT REQUIRED		REQUIRED	
19	POSITION TRANSMITTER / E/P CONVERTER	NOT REQUIRED		NOT REQUIRED	
20	AIR FILTER REGULATOR / AIR LOCK RELAY	REQUIRED		REQUIRED	
21	SOLENOID VALVE / JUNCTION BOX	REQUIRED		REQUIRED	
22	HAND WHEEL (SIDE MOUNTED) / LOCAL POSITIONER INDICATOR	REQUIRED		REQUIRED	
23	SERVICE CONDITIONS (LOAD)	FLOW (T/HR)	INLET PR KG/CM2(A)	OUTLET PR. KG/CM2(A)	TEMP DEG. C
24	CONDITION-1	10	3	1	33
26	MAX SHUT OFF PRESSURE,BODY DESIGN PRESSURE (KG/CM2 (g)), TEMP (DEG C)	15		15	50
27	IBR FORM-IIIC	NOT REQUIRED			
28	PROCESS CONDITION	CAVITATION			
29	MODEL OF CONTROL VALVE	BIDDER TO FURNISH			
30	SIZE OF CONTROL VALVE	BIDDER TO FURNISH			
D. GUARENTEED PERFORMANCE REQUIREMENTS					
31	LINEARITY / HYSTERISIS / SENSITIVITY / OVERALL ACCURACY	NA	NA	NA	NA

	TECHNICAL SPECIFICATION & DATA SHEET FOR CONTROL VALVE WITH ACCESSORIES (PNEUMATICALLY OPERATED)	Specification No.: PE-TS-508-145-H104			
		Rev. No. 00			
		Date :30.12.2024			
SPECIFICATION & DATA SHEET FOR CONTROL VALVE					
A. GENERAL INFORMATION					
1	TAG NUMBER / SERVICE	DRV-53 & DRV59		HPH-9A/9B NORMAL DRAIN TO HPH-8A/8B	
2	LOCATION / DUTY	INDOOR		MODULATING	
B. DESIGN CODES & STANDARDS					
3	CODE / STANDARD	REFER SPECIFIC NOTES			
C. TECHNICAL PARAMETERS / DESIGN FEATURES					
4	PIPE SIZE (OD X THK) mm	INLET	168.3 x 10.97	OUTLET	168.3 x 10.97
5	PIPE MATERIAL INLET / OUTLET	SA 106 GR C		SA 106 GR C	
6	VALVE BODY TYPE / MATERIAL / SIZE OF VALVE	GLOBE	A217WC6	BIDDER TO FURNISH	
7	GUIDING / NO. OF PORTS / TRIM FORM	CAGE	ONE	LINEAR	
8	CAGE TYPE / CAGE MATERIAL / GUIDE BUSH Material	STANDARD	17-4PH SS	17-4PH SS	
9	MATERIAL: PLUG / STEM/SEAT/YOKE	17-4PH SS	17-4PH SS	17-4PH SS	CARBON STEEL
10	PACKING MATERIAL / NOS / TYPE	GRAFOIL	SINGLE	STANDARD	
11	END CONNECTION / ANSI RATING / BONNET TYPE	BWE	BIDDER TO FURNISH	STANDARD	
12	FLOW ACTION / VALVE OUTLET VELOCITY	< 7 M/SEC(WATER)			
13	LEAKAGE CLASS / NOISE LEVEL (dBA)	IV		< 85 dBA	
14	VACUUM SERVICE / ANTI CAVITATION TRIM	NO		NO	
15	ACTUATOR TYPE	PNEUMATIC			
16	TRAVEL TIME FOR OPEN TO CLOSE, CLOSE TO OPEN	LESS THAN 10 SEC			
17	VALVE POSN. ON: ELECTRICAL SIGNAL FAILURE / SUPPLY AIR FAILURE	TO CLOSE		TO CLOSE	
18	SMART POSITIONER / POSITION LIMIT SWITCH	REQUIRED(PROFIBUS)		NOT REQUIRED	
19	POSITION TRANSMITTER / E/P CONVERTER	PART OF SMART POSITIONER		PART OF SMART POSITIONER	
20	AIR FILTER REGULATOR / AIR LOCK RELAY	REQUIRED		NOT REQUIRED	
21	SOLENOID VALVE / JUNCTION BOX	REQUIRED		REQUIRED	
22	HAND WHEEL (SIDE MOUNTED) / LOCAL POSITIONER INDICATOR	REQUIRED		REQUIRED	
23	SERVICE CONDITIONS (LOAD)	FLOW (T/HR)	INLET PR KG/CM2(A)	OUTLET PR. KG/CM2(A)	TEMP DEG. C
24	40% LOAD	23.98	39.9	27.1	229.9
25	60% LOAD	37.3	57.3	39.1	251.8
26	100%LOAD	84.68	92.5	63.4	282.1
27	VWO	93.7	98.4	67.2	286.4
28	20% LOAD	14	23.4	17.4	200
29	MAX SHUT OFF PRESSURE,BODY DESIGN PRESSURE (KG/CM2 (g)), TEMP (DEG C)	110		110	290
30	IBR FORM-IIIC	NOT REQUIRED			
31	PROCESS CONDITION	FLASHING			
32	MODEL OF CONTROL VALVE	BIDDER TO FURNISH			
33	SIZE OF CONTROL VALVE	BIDDER TO FURNISH			
D. GUARENTEED PERFORMANCE REQUIREMENTS					
34	LINEARITY / HYSTERISIS / SENSITIVITY / OVERALL ACCURACY	+/- 1%	+/- 1%	+/- 0.5%	+/- 2%

	TECHNICAL SPECIFICATION & DATA SHEET FOR CONTROL VALVE WITH ACCESSORIES (PNEUMATICALLY OPERATED)	Specification No.: PE-TS-508-145-H104			
		Rev. No. 00			
		Date :30.12.2024			
SPECIFICATION & DATA SHEET FOR CONTROL VALVE					
A. GENERAL INFORMATION					
1	TAG NUMBER / SERVICE	DRV-56 & DRV-62		HPH-9A/9B ALT. DRAIN TO F/T	
2	LOCATION / DUTY	INDOOR		MODULATING	
B. DESIGN CODES & STANDARDS					
3	CODE / STANDARD	REFER SPECIFIC NOTES			
C. TECHNICAL PARAMETERS / DESIGN FEATURES					
4	PIPE SIZE (OD X THK) mm	INLET	219.1X12.7	OUTLET	219.1 x 12.7
5	PIPE MATERIAL INLET / OUTLET	SA 106 GR C		SA 106 GR C	
6	VALVE BODY TYPE / MATERIAL / SIZE OF VALVE	GLOBE	A217WC9	BIDDER TO FURNISH	
7	GUIDING / NO. OF PORTS / TRIM FORM	CAGE	ONE	LINEAR	
8	CAGE TYPE / CAGE MATERIAL / GUIDE BUSH Material	STANDARD	440C	440C	
9	MATERIAL: PLUG / STEM/SEAT/YOKE	440C	440C	440C	CARBON STEEL
10	PACKING MATERIAL / NOS / TYPE	GRAFOIL	DOUBLE	V-CHEVRON	
11	END CONNECTION / ANSI RATING / BONNET TYPE	BWE	BIDDER TO FURNISH	STANDARD	
12	FLOW ACTION / VALVE OUTLET VELOCITY	< 7 M/SEC(WATER)			
13	LEAKAGE CLASS / NOISE LEVEL (dBA)	V		< 85 dBA	
14	VACUUM SERVICE / ANTI CAVITATION TRIM	YES		NO	
15	ACTUATOR TYPE	PNEUMATIC			
16	TRAVEL TIME FOR OPEN TO CLOSE, CLOSE TO OPEN	LESS THAN 10 SEC			
17	VALVE POSN. ON: ELECTRICAL SIGNAL FAILURE / SUPPLY AIR FAILURE	TO OPEN		TO OPEN	
18	SMART POSITIONER / POSITION LIMIT SWITCH	REQUIRED(HART)		NOT REQUIRED	
19	POSITION TRANSMITTER / E/P CONVERTER	PART OF SMART POSITIONER		PART OF SMART POSITIONER	
20	AIR FILTER REGULATOR / AIR LOCK RELAY	REQUIRED		NOT REQUIRED	
21	SOLENOID VALVE / JUNCTION BOX	REQUIRED		REQUIRED	
22	HAND WHEEL (SIDE MOUNTED) / LOCAL POSITIONER INDICATOR	REQUIRED		REQUIRED	
23	SERVICE CONDITIONS (LOAD)	FLOW (T/HR)	INLET PR KG/CM2(A)	OUTLET PR. KG/CM2(A)	TEMP DEG. C
24	40% LOAD	23.98	40.9	0.2	249
25	60% LOAD	37.3	58.1	0.2	271.5
26	100%LOAD	84.68	93.1	0.2	304.1
27	VWO	93.7	98.8	0.2	308.6
28	20%LOAD	14	23.4	0.2	218.1
29	MAX SHUT OFF PRESSURE,BODY DESIGN PRESSURE (KG/CM2 (g)), TEMP (DEG C)	110		110/VACCUM	310
30	IBR FORM-IIIC	NOT REQUIRED			
31	PROCESS CONDITION	FLASHING,HIGH DP			
32	MODEL OF CONTROL VALVE	BIDDER TO FURNISH			
33	SIZE OF CONTROL VALVE	BIDDER TO FURNISH			
D. GUARENTEED PERFORMANCE REQUIREMENTS					
34	LINEARITY / HYSTERISIS / SENSITIVITY / OVERALL ACCURACY	+/- 1%	+/- 1%	+/- 0.5%	+/- 2%

	TECHNICAL SPECIFICATION & DATA SHEET FOR CONTROL VALVE WITH ACCESSORIES (PNEUMATICALLY OPERATED)	Specification No.: PE-TS-508-145-H104			
		Rev. No. 00			
		Date :30.12.2024			
SPECIFICATION & DATA SHEET FOR CONTROL VALVE					
A. GENERAL INFORMATION					
1	TAG NUMBER / SERVICE	DRV-2 & DRV-8		HPH-8A/8B NORMAL DRAIN TO HPH-7A/7B	
2	LOCATION / DUTY	INDOOR		MODULATING	
B. DESIGN CODES & STANDARDS					
3	CODE / STANDARD	REFER SPECIFIC NOTES			
C. TECHNICAL PARAMETERS / DESIGN FEATURES					
4	PIPE SIZE (OD X THK) mm	INLET	273 x 12.7	OUTLET	273 x 12.7
5	PIPE MATERIAL INLET / OUTLET	SA 106 GR C		SA 106 GR C	
6	VALVE BODY TYPE / MATERIAL / SIZE OF VALVE	GLOBE	A217WC6	BIDDER TO FURNISH	
7	GUIDING / NO. OF PORTS / TRIM FORM	CAGE	ONE	LINEAR	
8	CAGE TYPE / CAGE MATERIAL / GUIDE BUSH Material	STANDARD	17-4PH SS	17-4PH SS	
9	MATERIAL: PLUG / STEM/SEAT/YOKE	17-4PH SS	17-4PH SS	17-4PH SS	CARBON STEEL
10	PACKING MATERIAL / NOS / TYPE	GRAFOIL	SINGLE	STANDARD	
11	END CONNECTION / ANSI RATING / BONNET TYPE	BWE	BIDDER TO FURNISH	STANDARD	
12	FLOW ACTION / VALVE OUTLET VELOCITY	< 7 M/SEC(WATER)			
13	LEAKAGE CLASS / NOISE LEVEL (dBA)	IV		< 85 dBA	
14	VACUUM SERVICE / ANTI CAVITATION TRIM	NO		NO	
15	ACTUATOR TYPE	PNEUMATIC			
16	TRAVEL TIME FOR OPEN TO CLOSE, CLOSE TO OPEN	LESS THAN 10 SEC			
17	VALVE POSN. ON: ELECTRICAL SIGNAL FAILURE / SUPPLY AIR FAILURE	TO CLOSE		TO CLOSE	
18	SMART POSITIONER / POSITION LIMIT SWITCH	REQUIRED(PROFIBUS)		NOT REQUIRED	
19	POSITION TRANSMITTER / E/P CONVERTER	PART OF SMART POSITIONER		PART OF SMART POSITIONER	
20	AIR FILTER REGULATOR / AIR LOCK RELAY	REQUIRED		NOT REQUIRED	
21	SOLENOID VALVE / JUNCTION BOX	REQUIRED		REQUIRED	
22	HAND WHEEL (SIDE MOUNTED) / LOCAL POSITIONER INDICATOR	REQUIRED		REQUIRED	
23	SERVICE CONDITIONS (LOAD)	FLOW (T/HR)	INLET PR KG/CM2(A)	OUTLET PR. KG/CM2(A)	TEMP DEG. C
24	40% LOAD	63.54	27.6	11.46	185.9
25	60% LOAD	100.334	39.5	16.3	202.8
26	100% LOAD	216.257	63.6	26.2	227.7
27	VWO	236.9	67.3	27.7	230.9
28	20% LOAD	36.6	15.6	6.8	162.3
29	MAX SHUT OFF PRESSURE,BODY DESIGN PRESSURE (KG/CM2 (g)), TEMP (DEG C)	76.2		76.2	240
30	IBR FORM-IIIC	NOT REQUIRED			
31	PROCESS CONDITION	FLASHING			
32	MODEL OF CONTROL VALVE	BIDDER TO FURNISH			
33	SIZE OF CONTROL VALVE	BIDDER TO FURNISH			
D. GUARENTEED PERFORMANCE REQUIREMENTS					
34	LINEARITY / HYSTERISIS / SENSITIVITY / OVERALL ACCURACY	+/- 1%	+/- 1%	+/- 0.5%	+/- 2%

	TECHNICAL SPECIFICATION & DATA SHEET FOR CONTROL VALVE WITH ACCESSORIES (PNEUMATICALLY OPERATED)	Specification No.: PE-TS-508-145-H104			
		Rev. No. 00			
		Date :30.12.2024			
SPECIFICATION & DATA SHEET FOR CONTROL VALVE					
A. GENERAL INFORMATION					
1	TAG NUMBER / SERVICE	DRV-5 & DRV-11		HPH-8A/8B ALT. DRAIN TO F/T	
2	LOCATION / DUTY	INDOOR		MODULATING	
B. DESIGN CODES & STANDARDS					
3	CODE / STANDARD	REFER SPECIFIC NOTES			
C. TECHNICAL PARAMETERS / DESIGN FEATURES					
4	PIPE SIZE (OD X THK) mm	INLET	273 x 12.7	OUTLET	323.9 x 12.7
5	PIPE MATERIAL INLET / OUTLET	SA 106 GR C		SA 106 GR C	
6	VALVE BODY TYPE / MATERIAL / SIZE OF VALVE	GLOBE	A217WC9	BIDDER TO FURNISH	
7	GUIDING / NO. OF PORTS / TRIM FORM	CAGE	ONE	LINEAR	
8	CAGE TYPE / CAGE MATERIAL / GUIDE BUSH Material	STANDARD	440C	440C	
9	MATERIAL: PLUG / STEM/SEAT/YOKE	440C	440C	440C	CARBON STEEL
10	PACKING MATERIAL / NOS / TYPE	GRAFOIL	DOUBLE	V-CHEVRON	
11	END CONNECTION / ANSI RATING / BONNET TYPE	BWE	BIDDER TO FURNISH	STANDARD	
12	FLOW ACTION / VALVE OUTLET VELOCITY	< 7 M/SEC(WATER)			
13	LEAKAGE CLASS / NOISE LEVEL (dBA)	V		< 85 dBA	
14	VACUUM SERVICE / ANTI CAVITATION TRIM	YES		NO	
15	ACTUATOR TYPE	PNEUMATIC			
16	TRAVEL TIME FOR OPEN TO CLOSE, CLOSE TO OPEN	LESS THAN 10 SEC			
17	VALVE POSN. ON: ELECTRICAL SIGNAL FAILURE / SUPPLY AIR FAILURE	TO OPEN		TO OPEN	
18	SMART POSITIONER / POSITION LIMIT SWITCH	REQUIRED(HART)		NOT REQUIRED	
19	POSITION TRANSMITTER / E/P CONVERTER	PART OF SMART POSITIONER		PART OF SMART POSITIONER	
20	AIR FILTER REGULATOR / AIR LOCK RELAY	REQUIRED		NOT REQUIRED	
21	SOLENOID VALVE / JUNCTION BOX	REQUIRED		REQUIRED	
22	HAND WHEEL (SIDE MOUNTED) / LOCAL POSITIONER INDICATOR	REQUIRED		REQUIRED	
23	SERVICE CONDITIONS (LOAD)	FLOW (T/HR)	INLET PR KG/CM2(A)	OUTLET PR. KG/CM2(A)	TEMP DEG. C
24	40% LOAD	63.54	27.6	0.2	226.8
25	60% LOAD	100.334	39.5	0.2	247.5
26	100%LOAD	216.257	63.6	0.2	277.7
27	VWO	236.9	67.3	0.2	281.5
28	20%LOAD	36.6	15.6	0.2	198.2
29	MAX SHUT OFF PRESSURE,BODY DESIGN PRESSURE (KG/CM2 (g)), TEMP (DEG C)	76.2		76.2/VACCUM	285
30	IBR FORM-IIIC	NOT REQUIRED			
31	PROCESS CONDITION	FLASHING,HIGH DP			
32	MODEL OF CONTROL VALVE	BIDDER TO FURNISH			
33	SIZE OF CONTROL VALVE	BIDDER TO FURNISH			
D. GUARENTEED PERFORMANCE REQUIREMENTS					
34	LINEARITY / HYSTERISIS / SENSITIVITY / OVERALL ACCURACY	+/- 1%	+/- 1%	+/- 0.5%	+/- 2%

	TECHNICAL SPECIFICATION & DATA SHEET FOR CONTROL VALVE WITH ACCESSORIES (PNEUMATICALLY OPERATED)	Specification No.: PE-TS-508-145-H104			
		Rev. No. 00			
		Date :30.12.2024			
SPECIFICATION & DATA SHEET FOR CONTROL VALVE					
A. GENERAL INFORMATION					
1	TAG NUMBER / SERVICE	DRV-15 & DRV-22		HPH-7A/7B NORMAL DRAIN TO DEAERATOR	
2	LOCATION / DUTY	INDOOR		MODULATING	
B. DESIGN CODES & STANDARDS					
3	CODE / STANDARD	REFER SPECIFIC NOTES			
C. TECHNICAL PARAMETERS / DESIGN FEATURES					
4	PIPE SIZE (OD X THK) mm	INLET	273 x 6.35	OUTLET	273 x 12.7
5	PIPE MATERIAL INLET / OUTLET	SA 106 GR B		SA 106 GR B	
6	VALVE BODY TYPE / MATERIAL / SIZE OF VALVE	GLOBE	A217WC6	BIDDER TO FURNISH	
7	GUIDING / NO. OF PORTS / TRIM FORM	CAGE	ONE	LINEAR	
8	CAGE TYPE / CAGE MATERIAL / GUIDE BUSH Material	STANDARD	17-4PH SS	17-4PH SS	
9	MATERIAL: PLUG / STEM/SEAT/YOKE	17-4PH SS	17-4PH SS	17-4PH SS	CARBON STEEL
10	PACKING MATERIAL / NOS / TYPE	GRAFOIL	SINGLE	STANDARD	
11	END CONNECTION / ANSI RATING / BONNET TYPE	BWE	BIDDER TO FURNISH	STANDARD	
12	FLOW ACTION / VALVE OUTLET VELOCITY	< 7 M/SEC(WATER)			
13	LEAKAGE CLASS / NOISE LEVEL (dBA)	IV		< 85 dBA	
14	VACUUM SERVICE / ANTI CAVITATION TRIM	NO		NO	
15	ACTUATOR TYPE	PNEUMATIC			
16	TRAVEL TIME FOR OPEN TO CLOSE, CLOSE TO OPEN	LESS THAN 10 SEC			
17	VALVE POSN. ON: ELECTRICAL SIGNAL FAILURE / SUPPLY AIR FAILURE	TO CLOSE		TO CLOSE	
18	SMART POSITIONER / POSITION LIMIT SWITCH	REQUIRED(PROFIBUS)		NOT REQUIRED	
19	POSITION TRANSMITTER / E/P CONVERTER	PART OF SMART POSITIONER		PART OF SMART POSITIONER	
20	AIR FILTER REGULATOR / AIR LOCK RELAY	REQUIRED		NOT REQUIRED	
21	SOLENOID VALVE / JUNCTION BOX	REQUIRED		REQUIRED	
22	HAND WHEEL (SIDE MOUNTED) / LOCAL POSITIONER INDICATOR	REQUIRED		REQUIRED	
23	SERVICE CONDITIONS (LOAD)	FLOW (T/HR)	INLET PR KG/CM2(A)	OUTLET PR. KG/CM2(A)	TEMP DEG. C
24	40% LOAD	79.65	9.2	6.3	163.2
25	60% LOAD	126.9	13.8	8.3	176
26	100%LOAD	265.6	23.3	12.2	198.1
27	VWO	290	24.8	12.8	200.9
28	20%LOAD	46.2	3.7	4	142.4
29	MAX SHUT OFF PRESSURE,BODY DESIGN PRESSURE (KG/CM2 (g)), TEMP (DEG C)	32		32	205
30	IBR FORM-IIIC	NOT REQUIRED			
31	PROCESS CONDITION	FLASHING			
32	MODEL OF CONTROL VALVE	BIDDER TO FURNISH			
33	SIZE OF CONTROL VALVE	BIDDER TO FURNISH			
D. GUARENTEED PERFORMANCE REQUIREMENTS					
34	LINEARITY / HYSTERISIS / SENSITIVITY / OVERALL ACCURACY	+/- 1%	+/- 1%	+/- 0.5%	+/- 2%

	TECHNICAL SPECIFICATION & DATA SHEET FOR CONTROL VALVE WITH ACCESSORIES (PNEUMATICALLY OPERATED)	Specification No.: PE-TS-508-145-H104			
		Rev. No. 00			
		Date :30.12.2024			
SPECIFICATION & DATA SHEET FOR CONTROL VALVE					
A. GENERAL INFORMATION					
1	TAG NUMBER / SERVICE	DRV-18 & DRV-25		HPH-7A/7B ALT. DRAIN TO F/T	
2	LOCATION / DUTY	INDOOR		MODULATING	
B. DESIGN CODES & STANDARDS					
3	CODE / STANDARD	REFER SPECIFIC NOTES			
C. TECHNICAL PARAMETERS / DESIGN FEATURES					
4	PIPE SIZE (OD X THK) mm	INLET	273 x 6.35	OUTLET	323.9 x 12.7
5	PIPE MATERIAL INLET / OUTLET	SA 106 GR B		SA 106 GR B	
6	VALVE BODY TYPE / MATERIAL / SIZE OF VALVE	GLOBE	A217WC9	BIDDER TO FURNISH	
7	GUIDING / NO. OF PORTS / TRIM FORM	CAGE	ONE	LINEAR	
8	CAGE TYPE / CAGE MATERIAL / GUIDE BUSH Material	STANDARD	440C	440C	
9	MATERIAL: PLUG / STEM/SEAT/YOKE	440C	440C	440C	CARBON STEEL
10	PACKING MATERIAL / NOS / TYPE	GRAFOIL	DOUBLE	V-CHEVRON	
11	END CONNECTION / ANSI RATING / BONNET TYPE	BWE	BIDDER TO FURNISH	STANDARD	
12	FLOW ACTION / VALVE OUTLET VELOCITY	< 7 M/SEC(WATER)			
13	LEAKAGE CLASS / NOISE LEVEL (dBA)	V		< 85 dBA	
14	VACUUM SERVICE / ANTI CAVITATION TRIM	YES		NO	
15	ACTUATOR TYPE	PNEUMATIC			
16	TRAVEL TIME FOR OPEN TO CLOSE, CLOSE TO OPEN	LESS THAN 10 SEC			
17	VALVE POSN. ON: ELECTRICAL SIGNAL FAILURE / SUPPLY AIR FAILURE	TO OPEN		TO OPEN	
18	SMART POSITIONER / POSITION LIMIT SWITCH	REQUIRED(HART)		NOT REQUIRED	
19	POSITION TRANSMITTER / E/P CONVERTER	PART OF SMART POSITIONER		PART OF SMART POSITIONER	
20	AIR FILTER REGULATOR / AIR LOCK RELAY	REQUIRED		NOT REQUIRED	
21	SOLENOID VALVE / JUNCTION BOX	REQUIRED		REQUIRED	
22	HAND WHEEL (SIDE MOUNTED) / LOCAL POSITIONER INDICATOR	REQUIRED		REQUIRED	
23	SERVICE CONDITIONS (LOAD)	FLOW (T/HR)	INLET PR KG/CM2(A)	OUTLET PR. KG/CM2(A)	TEMP DEG. C
24	40% LOAD	79.65	11.6	0.2	184.3
25	60% LOAD	126.9	16.2	0.2	200.6
26	100%LOAD	265.6	25.9	0.2	224.6
27	VWO	290	27.3	0.2	227.6
28	20%LOAD	46.2	6.5	0.2	160.8
29	MAX SHUT OFF PRESSURE,BODY DESIGN PRESSURE (KG/CM2 (g)), TEMP (DEG C)	32		32/VACCUM	230
30	IBR FORM-IIIC	NOT REQUIRED			
31	PROCESS CONDITION	FLASHING,HIGH DP			
32	MODEL OF CONTROL VALVE	BIDDER TO FURNISH			
33	SIZE OF CONTROL VALVE	BIDDER TO FURNISH			
D. GUARENTEED PERFORMANCE REQUIREMENTS					
34	LINEARITY / HYSTERISIS / SENSITIVITY / OVERALL ACCURACY	+/- 1%	+/- 1%	+/- 0.5%	+/- 2%

	TECHNICAL SPECIFICATION & DATA SHEET FOR CONTROL VALVE WITH ACCESSORIES (PNEUMATICALLY OPERATED)	Specification No.: PE-TS-508-145-H104			
		Rev. No. 00			
		Date :30.12.2024			
SPECIFICATION & DATA SHEET FOR CONTROL VALVE					
A. GENERAL INFORMATION					
1	TAG NUMBER / SERVICE	DRV-82		LPH-5 NORMAL DRAIN TO LPH-4	
2	LOCATION / DUTY	INDOOR		MODULATING	
B. DESIGN CODES & STANDARDS					
3	CODE / STANDARD	REFER SPECIFIC NOTES			
C. TECHNICAL PARAMETERS / DESIGN FEATURES					
4	PIPE SIZE (OD X THK) mm	INLET	168.3 x 7.11	OUTLET	219.1 x 12.7
5	PIPE MATERIAL INLET / OUTLET	SA 106 GR B		SA 106 GR B	
6	VALVE BODY TYPE / MATERIAL / SIZE OF VALVE	GLOBE	A217WC6	BIDDER TO FURNISH	
7	GUIDING / NO. OF PORTS / TRIM FORM	CAGE	ONE	LINEAR	
8	CAGE TYPE / CAGE MATERIAL / GUIDE BUSH Material	STANDARD	17-4PH SS	17-4PH SS	
9	MATERIAL: PLUG / STEM/SEAT/YOKE	17-4PH SS	17-4PH SS	17-4PH SS	CARBON STEEL
10	PACKING MATERIAL / NOS / TYPE	GRAFOIL	DOUBLE	V-CHEVRON	
11	END CONNECTION / ANSI RATING / BONNET TYPE	BWE	BIDDER TO FURNISH	STANDARD	
12	FLOW ACTION / VALVE OUTLET VELOCITY	< 7 M/SEC(WATER)			
13	LEAKAGE CLASS / NOISE LEVEL (dBA)	IV		< 85 dBA	
14	VACUUM SERVICE / ANTI CAVITATION TRIM	YES		NO	
15	ACTUATOR TYPE	PNEUMATIC			
16	TRAVEL TIME FOR OPEN TO CLOSE, CLOSE TO OPEN	LESS THAN 10 SEC			
17	VALVE POSN. ON: ELECTRICAL SIGNAL FAILURE / SUPPLY AIR FAILURE	TO CLOSE		TO CLOSE	
18	SMART POSITIONER / POSITION LIMIT SWITCH	REQUIRED(PROFIBUS)		NOT REQUIRED	
19	POSITION TRANSMITTER / E/P CONVERTER	PART OF SMART POSITIONER		PART OF SMART POSITIONER	
20	AIR FILTER REGULATOR / AIR LOCK RELAY	REQUIRED		NOT REQUIRED	
21	SOLENOID VALVE / JUNCTION BOX	REQUIRED		REQUIRED	
22	HAND WHEEL (SIDE MOUNTED) / LOCAL POSITIONER INDICATOR	REQUIRED		REQUIRED	
23	SERVICE CONDITIONS (LOAD)	FLOW (T/HR)	INLET PR KG/CM2(A)	OUTLET PR. KG/CM2(A)	TEMP DEG. C
24	40% LOAD	26.54	2.7	1.6	111.4
25	60% LOAD	39.3	3.6	2.3	120.8
26	100%LOAD	74.41	5.3	3.3	135.3
27	VWO	80.25	5.5	3.5	136.6
28	20%LOAD	15.98	1.3	1.2	96.9
29	MAX SHUT OFF PRESSURE,BODY DESIGN PRESSURE (KG/CM2 (g)), TEMP (DEG C)	7		7	145
30	IBR FORM-IIIC	NOT REQUIRED			
31	PROCESS CONDITION	FLASHING			
32	MODEL OF CONTROL VALVE	BIDDER TO FURNISH			
33	SIZE OF CONTROL VALVE	BIDDER TO FURNISH			
D. GUARENTEED PERFORMANCE REQUIREMENTS					
34	LINEARITY / HYSTERISIS / SENSITIVITY / OVERALL ACCURACY	+/- 1%	+/- 1%	+/- 0.5%	+/- 2%

	TECHNICAL SPECIFICATION & DATA SHEET FOR CONTROL VALVE WITH ACCESSORIES (PNEUMATICALLY OPERATED)	Specification No.: PE-TS-508-145-H104			
		Rev. No. 00			
		Date :30.12.2024			
SPECIFICATION & DATA SHEET FOR CONTROL VALVE					
A. GENERAL INFORMATION					
1	TAG NUMBER / SERVICE	DRV-85		LPH-5 ALT. DRAIN TO F/T	
2	LOCATION / DUTY	INDOOR		MODULATING	
B. DESIGN CODES & STANDARDS					
3	CODE / STANDARD	REFER SPECIFIC NOTES			
C. TECHNICAL PARAMETERS / DESIGN FEATURES					
4	PIPE SIZE (OD X THK) mm	INLET	168.3 x 7.11	OUTLET	219.1 x 12.7
5	PIPE MATERIAL INLET / OUTLET	SA 106 GR B		SA 106 GR B	
6	VALVE BODY TYPE / MATERIAL / SIZE OF VALVE	GLOBE	A217WC9	BIDDER TO FURNISH	
7	GUIDING / NO. OF PORTS / TRIM FORM	CAGE	ONE	LINEAR	
8	CAGE TYPE / CAGE MATERIAL / GUIDE BUSH Material	STANDARD	440C	440C	
9	MATERIAL: PLUG / STEM/SEAT/YOKE	440C	440C	440C	CARBON STEEL
10	PACKING MATERIAL / NOS / TYPE	GRAFOIL	DOUBLE	V-CHEVRON	
11	END CONNECTION / ANSI RATING / BONNET TYPE	BWE	BIDDER TO FURNISH	STANDARD	
12	FLOW ACTION / VALVE OUTLET VELOCITY	< 7 M/SEC(WATER)			
13	LEAKAGE CLASS / NOISE LEVEL (dBA)	V		< 85 dBA	
14	VACUUM SERVICE / ANTI CAVITATION TRIM	YES		NO	
15	ACTUATOR TYPE	PNEUMATIC			
16	TRAVEL TIME FOR OPEN TO CLOSE, CLOSE TO OPEN	LESS THAN 10 SEC			
17	VALVE POSN. ON: ELECTRICAL SIGNAL FAILURE / SUPPLY AIR FAILURE	TO OPEN		TO OPEN	
18	SMART POSITIONER / POSITION LIMIT SWITCH	REQUIRED(HART)		NOT REQUIRED	
19	POSITION TRANSMITTER / E/P CONVERTER	PART OF SMART POSITIONER		PART OF SMART POSITIONER	
20	AIR FILTER REGULATOR / AIR LOCK RELAY	REQUIRED		NOT REQUIRED	
21	SOLENOID VALVE / JUNCTION BOX	REQUIRED		REQUIRED	
22	HAND WHEEL (SIDE MOUNTED) / LOCAL POSITIONER INDICATOR	REQUIRED		REQUIRED	
23	SERVICE CONDITIONS (LOAD)	FLOW (T/HR)	INLET PR KG/CM2(A)	OUTLET PR. KG/CM2(A)	TEMP DEG. C
24	40% LOAD	26.54	2.7	0.2	129.1
25	60% LOAD	39.3	3.6	0.2	139.7
26	100%LOAD	74.41	5.3	0.2	155.1
27	VWO	80.25	5.5	0.2	157.1
28	20%LOAD	15.98	1.3	0.2	112.9
31	MAX SHUT OFF PRESSURE,BODY DESIGN PRESSURE (KG/CM2 (g)), TEMP (DEG C)	7		7 /VACCUM	165
32	IBR FORM-IIIC	NOT REQUIRED			
33	PROCESS CONDITION	FLASHING			
34	MODEL OF CONTROL VALVE	BIDDER TO FURNISH			
35	SIZE OF CONTROL VALVE	BIDDER TO FURNISH			
D. GUARENTEED PERFORMANCE REQUIREMENTS					
36	LINEARITY / HYSTERISIS / SENSITIVITY / OVERALL ACCURACY	+/- 1%	+/- 1%	+/- 0.5%	+/- 2%

	TECHNICAL SPECIFICATION & DATA SHEET FOR CONTROL VALVE WITH ACCESSORIES (PNEUMATICALLY OPERATED)	Specification No.: PE-TS-508-145-H104			
		Rev. No. 00			
		Date :30.12.2024			
SPECIFICATION & DATA SHEET FOR CONTROL VALVE					
A. GENERAL INFORMATION					
1	TAG NUMBER / SERVICE	DRV-65		LPH-4 NORMAL DRAIN TO LPH-3	
2	LOCATION / DUTY	INDOOR		MODULATING	
B. DESIGN CODES & STANDARDS					
3	CODE / STANDARD	REFER SPECIFIC NOTES			
C. TECHNICAL PARAMETERS / DESIGN FEATURES					
4	PIPE SIZE (OD X THK) mm INLET / OUTLET	INLET	219.1 x 6.35	OUTLET	219.1 x 12.7
5	PIPE MATERIAL INLET / OUTLET	SA 106 GR B		SA 106 GR B	
6	VALVE BODY TYPE / MATERIAL / SIZE OF VALVE	GLOBE	A217WC6	BIDDER TO FURNISH	
7	GUIDING / NO. OF PORTS / TRIM FORM	CAGE	ONE	LINEAR	
8	CAGE TYPE / CAGE MATERIAL / GUIDE BUSH Material	STANDARD	17-4PH SS	17-4PH SS	
9	MATERIAL: PLUG / STEM/SEAT/YOKE	17-4PH SS	17-4PH SS	17-4PH SS	CARBON STEEL
10	PACKING MATERIAL / NOS / TYPE	GRAFOIL	DOUBLE	V-CHEVRON	
11	END CONNECTION / ANSI RATING / BONNET TYPE	BWE	BIDDER TO FURNISH	STANDARD	
12	FLOW ACTION / VALVE OUTLET VELOCITY	< 7 M/SEC(WATER)			
13	LEAKAGE CLASS / NOISE LEVEL (dBA)	IV		< 85 dBA	
14	VACUUM SERVICE / ANTI CAVITATION TRIM	YES		NO	
15	ACTUATOR TYPE	PNEUMATIC			
16	TRAVEL TIME FOR OPEN TO CLOSE, CLOSE TO OPEN	LESS THAN 10 SEC			
17	VALVE POSN. ON: ELECTRICAL SIGNAL FAILURE / SUPPLY AIR FAILURE	TO CLOSE		TO CLOSE	
18	SMART POSITIONER / POSITION LIMIT SWITCH	REQUIRED(PROFIBUS)		NOT REQUIRED	
19	POSITION TRANSMITTER / E/P CONVERTER	PART OF SMART POSITIONER		PART OF SMART POSITIONER	
20	AIR FILTER REGULATOR / AIR LOCK RELAY	REQUIRED		NOT REQUIRED	
21	SOLENOID VALVE / JUNCTION BOX	REQUIRED		REQUIRED	
22	HAND WHEEL (SIDE MOUNTED) / LOCAL POSITIONER INDICATOR	REQUIRED		REQUIRED	
23	SERVICE CONDITIONS (LOAD)	FLOW (T/HR)	INLET PR KG/CM2(A)	OUTLET PR. KG/CM2(A)	TEMP DEG. C
24	40% LOAD	52.16	1.4	0.8	91.5
25	60% LOAD	76.81	2	1.2	99.7
26	100%LOAD	143.3	2.81	1.6	109.5
27	VWO	154.3	2.86	1.7	113.4
28	20%LOAD	31.2	0.8	0.7	79.5
31	MAX SHUT OFF PRESSURE,BODY DESIGN PRESSURE (KG/CM2 (g)), TEMP (DEG C)	7		7/VACCUM	115
32	IBR FORM-IIIC	NOT REQUIRED			
33	PROCESS CONDITION	FLASHING			
34	MODEL OF CONTROL VALVE	BIDDER TO FURNISH			
35	SIZE OF CONTROL VALVE	BIDDER TO FURNISH			
D. GUARENTEED PERFORMANCE REQUIREMENTS					
36	LINEARITY / HYSTERISIS / SENSITIVITY / OVERALL ACCURACY	+/- 1%	+/- 1%	+/- 0.5%	+/- 2%

	TECHNICAL SPECIFICATION & DATA SHEET FOR CONTROL VALVE WITH ACCESSORIES (PNEUMATICALLY OPERATED)	Specification No.: PE-TS-508-145-H104			
		Rev. No. 00			
		Date :30.12.2024			
SPECIFICATION & DATA SHEET FOR CONTROL VALVE					
A. GENERAL INFORMATION					
1	TAG NUMBER / SERVICE	DRV-68		LPH-4 ALT. DRAIN TO F/T	
2	LOCATION / DUTY	INDOOR		MODULATING	
B. DESIGN CODES & STANDARDS					
3	CODE / STANDARD	REFER SPECIFIC NOTES			
C. TECHNICAL PARAMETERS / DESIGN FEATURES					
4	PIPE SIZE (OD X THK) mm INLET / OUTLET	INLET	219.1 x 6.35	OUTLET	219.1 x 12.7
5	PIPE MATERIAL INLET / OUTLET	SA 106 GR B		SA 106 GR B	
6	VALVE BODY TYPE / MATERIAL / SIZE OF VALVE	GLOBE	A217WC9	BIDDER TO FURNISH	
7	GUIDING / NO. OF PORTS / TRIM FORM	CAGE	ONE	LINEAR	
8	CAGE TYPE / CAGE MATERIAL / GUIDE BUSH Material	STANDARD	440C	440C	
9	MATERIAL: PLUG / STEM/SEAT/YOKE	440C	440C	440C	CARBON STEEL
10	PACKING MATERIAL / NOS / TYPE	GRAFOIL	DOUBLE	V-CHEVRON	
11	END CONNECTION / ANSI RATING / BONNET TYPE	BWE	BIDDER TO FURNISH	STANDARD	
12	FLOW ACTION / VALVE OUTLET VELOCITY	< 7 M/SEC(WATER)			
13	LEAKAGE CLASS / NOISE LEVEL (dBA)	V		< 85 dBA	
14	VACUUM SERVICE / ANTI CAVITATION TRIM	YES		NO	
15	ACTUATOR TYPE	PNEUMATIC			
16	TRAVEL TIME FOR OPEN TO CLOSE, CLOSE TO OPEN	LESS THAN 10 SEC			
17	VALVE POSN. ON: ELECTRICAL SIGNAL FAILURE / SUPPLY AIR FAILURE	TO OPEN		TO OPEN	
18	SMART POSITIONER / POSITION LIMIT SWITCH	REQUIRED(HART)		NOT REQUIRED	
19	POSITION TRANSMITTER / E/P CONVERTER	PART OF SMART POSITIONER		PART OF SMART POSITIONER	
20	AIR FILTER REGULATOR / AIR LOCK RELAY	REQUIRED		NOT REQUIRED	
21	SOLENOID VALVE / JUNCTION BOX	REQUIRED		REQUIRED	
22	HAND WHEEL (SIDE MOUNTED) / LOCAL POSITIONER INDICATOR	REQUIRED		REQUIRED	
23	SERVICE CONDITIONS (LOAD)	FLOW (T/HR)	INLET PR KG/CM2(A)	OUTLET PR. KG/CM2(A)	TEMP DEG. C
24	40% LOAD	52.16	1.4	0.2	91.5
25	60% LOAD	76.81	2	0.2	99.7
26	100%LOAD	143.3	2.81	0.2	109.5
27	VWO	154.3	2.86	0.2	113.4
28	20%LOAD	31.2	0.8	0.2	79.5
31	MAX SHUT OFF PRESSURE,BODY DESIGN PRESSURE (KG/CM2 (g)), TEMP (DEG C)	7		7/VACCUM	140
32	IBR FORM-IIIC	NOT REQUIRED			
33	PROCESS CONDITION	FLASHING			
34	MODEL OF CONTROL VALVE	BIDDER TO FURNISH			
35	SIZE OF CONTROL VALVE	BIDDER TO FURNISH			
D. GUARENTEED PERFORMANCE REQUIREMENTS					
36	LINEARITY / HYSTERISIS / SENSITIVITY / OVERALL ACCURACY	+/- 1%	+/- 1%	+/- 0.5%	+/- 2%

File No. PEM-PG0MM(24)/1/2025-PS-PEM-PGI-1 (Computer No. 134626)
Generated from eOffice by Manoj Bhardwaj, ENGINEER(MB)-PG I-1-PS-PEM, ENGINEER, BHARAT HEAVY ELECTRICAL LTD on 07/01/2025 03:39 pm

	TECHNICAL SPECIFICATION & DATA SHEET FOR CONTROL VALVE WITH ACCESSORIES (PNEUMATICALLY OPERATED)	Specification No.: PE-TS-508-145-H104			
		Rev. No. 00			
		Date :30.12.2024			
SPECIFICATION & DATA SHEET FOR CONTROL VALVE					
A. GENERAL INFORMATION					
1	TAG NUMBER / SERVICE	DRV-77		DRIP PUMP DISCHARGE CONTROL	
2	LOCATION / DUTY	INDOOR		MODULATING	
B. DESIGN CODES & STANDARDS					
3	CODE / STANDARD	REFER SPECIFIC NOTES			
C. TECHNICAL PARAMETERS / DESIGN FEATURES					
4	PIPE SIZE (OD X THK) mm INLET / OUTLET	INLET	219.1 x 12.7	OUTLET	219.1 x 12.7
5	PIPE MATERIAL INLET / OUTLET	SA 106 GR C		SA 106 GR C	
6	VALVE BODY TYPE / MATERIAL / SIZE OF VALVE	GLOBE	A216WCB	BIDDER TO FURNISH	
7	GUIDING / NO. OF PORTS / TRIM FORM	CAGE	ONE	LINEAR	
8	CAGE TYPE / CAGE MATERIAL / GUIDE BUSH Material	STANDARD	SS 316 STELLITED	SS 316 STELLITED	
9	MATERIAL: PLUG / STEM/SEAT/YOKE	SS 316 STELLITED	SS 316 STELLITED	SS 316 STELLITED	CARBON STEEL
10	PACKING MATERIAL / NOS / TYPE	GRAFOIL	DOUBLE	STANDARD	
11	END CONNECTION / ANSI RATING / BONNET TYPE	BWE	BIDDER TO FURNISH	STANDARD	
12	FLOW ACTION / VALVE OUTLET VELOCITY	< 7 M/SEC(WATER)			
13	LEAKAGE CLASS / NOISE LEVEL (dBA)	IV		< 85 dBA	
14	VACUUM SERVICE / ANTI CAVITATION TRIM	NO		NO	
15	ACTUATOR TYPE	PNEUMATIC			
16	TRAVEL TIME FOR OPEN TO CLOSE, CLOSE TO OPEN	LESS THAN 10 SEC			
17	VALVE POSN. ON: ELECTRICAL SIGNAL FAILURE / SUPPLY AIR FAILURE	TO CLOSE		TO CLOSE	
18	SMART POSITIONER / POSITION LIMIT SWITCH	REQUIRED(PROFIBUS)		NOT REQUIRED	
19	POSITION TRANSMITTER / E/P CONVERTER	PART OF SMART POSITIONER		PART OF SMART POSITIONER	
20	AIR FILTER REGULATOR / AIR LOCK RELAY	REQUIRED		NOT REQUIRED	
21	SOLENOID VALVE / JUNCTION BOX	REQUIRED		REQUIRED	
22	HAND WHEEL (SIDE MOUNTED) / LOCAL POSITIONER INDICATOR	REQUIRED		REQUIRED	
23	SERVICE CONDITIONS (LOAD)	FLOW (T/HR)	INLET PR KG/CM2(A)	OUTLET PR. KG/CM2(A)	TEMP DEG. C
24	40% LOAD	82.2	26.7	10	90
25	60% LOAD	120.5	26.6	12.5	97.7
26	100% LOAD	222.1	25.4	18.3	109.2
27	VWO	238.8	24.9	19.3	110.7
28	20% LOAD	49.3	26.6	7.2	78.4
31	MAX SHUT OFF PRESSURE,BODY DESIGN PRESSURE (KG/CM2 (g)), TEMP (DEG C)	45		45	130
32	IBR FORM-IIIC	NOT REQUIRED			
33	PROCESS CONDITION	--			
34	MODEL OF CONTROL VALVE	BIDDER TO FURNISH			
35	SIZE OF CONTROL VALVE	BIDDER TO FURNISH			
D. GUARENTEED PERFORMANCE REQUIREMENTS					
36	LINEARITY / HYSTERISIS / SENSITIVITY / OVERALL ACCURACY	+/- 1%	+/- 1%	+/- 0.5%	+/- 2%

	TECHNICAL SPECIFICATION & DATA SHEET FOR CONTROL VALVE WITH ACCESSORIES (PNEUMATICALLY OPERATED)	Specification No.: PE-TS-508-145-H104			
		Rev. No. 00			
		Date :30.12.2024			
SPECIFICATION & DATA SHEET FOR CONTROL VALVE					
A. GENERAL INFORMATION					
1	TAG NUMBER / SERVICE	DRV-31		LPH-3 ALT. DRAIN TO F/T	
2	LOCATION / DUTY	INDOOR		MODULATING	
B. DESIGN CODES & STANDARDS					
3	CODE / STANDARD	REFER SPECIFIC NOTES			
C. TECHNICAL PARAMETERS / DESIGN FEATURES					
4	PIPE SIZE (OD X THK) mm INLET / OUTLET	INLET	273 x 6.35	OUTLET	323.9 x 12.7
5	PIPE MATERIAL INLET / OUTLET	SA 106 GR B		SA 106 GR B	
6	VALVE BODY TYPE / MATERIAL / SIZE OF VALVE	GLOBE	A217WC9	BIDDER TO FURNISH	
7	GUIDING / NO. OF PORTS / TRIM FORM	CAGE	ONE	LINEAR	
8	CAGE TYPE / CAGE MATERIAL / GUIDE BUSH Material	STANDARD	440C	440C	
9	MATERIAL: PLUG / STEM/SEAT/YOKE	440C	440C	440C	CARBON STEEL
10	PACKING MATERIAL / NOS / TYPE	GRAFOIL	DOUBLE	V-CHEVRON	
11	END CONNECTION / ANSI RATING / BONNET TYPE	BWE	BIDDER TO FURNISH	STANDARD	
12	FLOW ACTION / VALVE OUTLET VELOCITY	< 7 M/SEC(WATER)			
13	LEAKAGE CLASS / NOISE LEVEL (dBA)	V		< 85 dBA	
14	VACUUM SERVICE / ANTI CAVITATION TRIM	YES		NO	
15	ACTUATOR TYPE	PNEUMATIC			
16	TRAVEL TIME FOR OPEN TO CLOSE, CLOSE TO OPEN	LESS THAN 10 SEC			
17	VALVE POSN. ON: ELECTRICAL SIGNAL FAILURE / SUPPLY AIR FAILURE	TO OPEN		TO OPEN	
18	SMART POSITIONER / POSITION LIMIT SWITCH	REQUIRED(HART)		NOT REQUIRED	
19	POSITION TRANSMITTER / E/P CONVERTER	PART OF SMART POSITIONER		PART OF SMART POSITIONER	
20	AIR FILTER REGULATOR / AIR LOCK RELAY	REQUIRED		NOT REQUIRED	
21	SOLENOID VALVE / JUNCTION BOX	REQUIRED		REQUIRED	
22	HAND WHEEL (SIDE MOUNTED) / LOCAL POSITIONER INDICATOR	REQUIRED		REQUIRED	
23	SERVICE CONDITIONS (LOAD)	FLOW (T/HR)	INLET PR KG/CM2(A)	OUTLET PR. KG/CM2(A)	TEMP DEG. C
24	40% LOAD	82.2	0.7	0.2	90
25	60% LOAD	120.5	0.9	0.2	97.7
26	100%LOAD	222.1	1.3	0.2	109.2
27	VWO	238.8	1.3	0.2	110.7
28	20%LOAD	49.3	0.4	0.2	78.4
31	MAX SHUT OFF PRESSURE,BODY DESIGN PRESSURE (KG/CM2 (g)), TEMP (DEG C)	3.5		3.5/VACUUM	115
32	IBR FORM-IIIC	NOT REQUIRED			
33	PROCESS CONDITION	FLASHING			
34	MODEL OF CONTROL VALVE	BIDDER TO FURNISH			
35	SIZE OF CONTROL VALVE	BIDDER TO FURNISH			
D. GUARENTEED PERFORMANCE REQUIREMENTS					
36	LINEARITY / HYSTERISIS / SENSITIVITY / OVERALL ACCURACY	+/- 1%	+/- 1%	+/- 0.5%	+/- 2%

	TECHNICAL SPECIFICATION & DATA SHEET FOR CONTROL VALVE WITH ACCESSORIES (PNEUMATICALLY OPERATED)	Specification No.: PE-TS-508-145-H104			
		Rev. No. 00			
		Date :30.12.2024			
SPECIFICATION & DATA SHEET FOR CONTROL VALVE					
A. GENERAL INFORMATION					
1	TAG NUMBER / SERVICE	DRV-48		DEAERATOR OVERFLOW TO F/T	
2	LOCATION / DUTY	INDOOR		ON/OFF	
B. DESIGN CODES & STANDARDS					
3	CODE / STANDARD	REFER SPECIFIC NOTES			
C. TECHNICAL PARAMETERS / DESIGN FEATURES					
4	PIPE SIZE (OD X THK) mm INLET / OUTLET	INLET	219.1 x 6.35	OUTLET	323.9 x 9.53
5	PIPE MATERIAL INLET / OUTLET	SA 106 GR C		SA 106 GR C	
6	VALVE BODY TYPE / MATERIAL / SIZE OF VALVE	GLOBE	A217WC9	BIDDER TO FURNISH	
7	GUIDING / NO. OF PORTS / TRIM FORM	CAGE	ONE	ON-OFF(QUICK OPEN)	
8	CAGE TYPE / CAGE MATERIAL / GUIDE BUSH Material	STANDARD	440 C	440 C	
9	MATERIAL: PLUG / STEM/SEAT/YOKE	440 C	440 C	440 C	CARBON STEEL
10	PACKING MATERIAL / NOS / TYPE	GRAFOIL	DOUBLE	V-CHEVRON	
11	END CONNECTION / ANSI RATING / BONNET TYPE	BWE	BIDDER TO FURNISH	STANDARD	
12	FLOW ACTION / VALVE OUTLET VELOCITY	< 7 M/SEC(WATER)			
13	LEAKAGE CLASS / NOISE LEVEL (dBA)	V		< 85 dBA	
14	VACUUM SERVICE / ANTI CAVITATION TRIM	YES		NO	
15	ACTUATOR TYPE	PNEUMATIC			
16	TRAVEL TIME FOR OPEN TO CLOSE, CLOSE TO OPEN	LESS THAN 10 SEC			
17	VALVE POSN. ON: ELECTRICAL SIGNAL FAILURE / SUPPLY AIR FAILURE	TO OPEN		STAYPUT	
18	SMART POSITIONER / POSITION LIMIT SWITCH	NOT REQUIRED		REQUIRED	
19	POSITION TRANSMITTER / E/P CONVERTER	NOT REQUIRED		NOT REQUIRED	
20	AIR FILTER REGULATOR / AIR LOCK RELAY	REQUIRED		REQUIRED	
21	SOLENOID VALVE / JUNCTION BOX	REQUIRED		REQUIRED	
22	HAND WHEEL (SIDE MOUNTED) / LOCAL POSITIONER INDICATOR	REQUIRED		REQUIRED	
23	SERVICE CONDITIONS (LOAD)	FLOW (T/HR)	INLET PR KG/CM2(A)	OUTLET PR. KG/CM2(A)	TEMP DEG. C
24	MAX.-1 10% BMCR	256	14.93	0.26	190.3
25	MAX.-2 10% BMCR	256	5.7	0.26	138.2
26	MAX SHUT OFF PRESSURE,BODY DESIGN PRESSURE (KG/CM2 (g)), TEMP (DEG C)	20		20/VACUUM	200
27	IBR FORM-IIIC	NOT REQUIRED			
28	PROCESS CONDITION	FLASHING			
29	MODEL OF CONTROL VALVE	BIDDER TO FURNISH			
30	SIZE OF CONTROL VALVE	BIDDER TO FURNISH			
D. GUARENTEED PERFORMANCE REQUIREMENTS					
31	LINEARITY / HYSTERISIS / SENSITIVITY / OVERALL ACCURACY	NA	NA	NA	NA

	TECHNICAL SPECIFICATION & DATA SHEET FOR CONTROL VALVE WITH ACCESSORIES (PNEUMATICALLY OPERATED)	Specification No.: PE-TS-508-145-H104			
		Rev. No. 00			
		Date :30.12.2024			
SPECIFICATION & DATA SHEET FOR CONTROL VALVE					
A. GENERAL INFORMATION					
1	TAG NUMBER / SERVICE	DMV-43		NORMAL DM MU TO HOTWELL	
2	LOCATION / DUTY	INDOOR		MODULATING	
B. DESIGN CODES & STANDARDS					
3	CODE / STANDARD	REFER SPECIFIC NOTES			
C. TECHNICAL PARAMETERS / DESIGN FEATURES					
4	PIPE SIZE (OD X THK) mm INLET / OUTLET	INLET	168.3 X 3.4	OUTLET	168.3 X 3.4
5	PIPE MATERIAL INLET / OUTLET	SA 312 TP 304 (ERW)		SA 312 TP 304 (ERW)	
6	VALVE BODY TYPE / MATERIAL / SIZE OF VALVE	GLOBE	A351CF8M	BIDDER TO FURNISH	
7	GUIDING / NO. OF PORTS / TRIM FORM	CAGE	ONE	EQ %	
8	CAGE TYPE / CAGE MATERIAL / GUIDE BUSH Material	STANDARD	SS316	SS316	
9	MATERIAL: PLUG / STEM/SEAT/YOKE	SS316	SS316	SS316	CARBON STEEL
10	PACKING MATERIAL / NOS / TYPE	GRAFOIL	DOUBLE	V-CHEVRON	
11	END CONNECTION / ANSI RATING / BONNET TYPE	BWE	BIDDER TO FURNISH	STANDARD	
12	FLOW ACTION / VALVE OUTLET VELOCITY	PNEUMATIC			
13	LEAKAGE CLASS / NOISE LEVEL (dBA)	V		< 85 dBA	
14	VACUUM SERVICE / ANTI CAVITATION TRIM	YES		NO	
15	ACTUATOR TYPE	PNEUMATIC WITH SMART POSITIONER (HART)			
16	TRAVEL TIME FOR OPEN TO CLOSE, CLOSE TO OPEN	LESS THAN 10 SEC			
17	VALVE POSN. ON: ELECTRICAL SIGNAL FAILURE / SUPPLY AIR FAILURE	TO OPEN		STAYPUT	
18	SMART POSITIONER / POSITION LIMIT SWITCH	REQUIRED(HART)		NOT REQUIRED	
19	POSITION TRANSMITTER / E/P CONVERTER	PART OF SMART POSITIONER		PART OF SMART POSITIONER	
20	AIR FILTER REGULATOR / AIR LOCK RELAY	REQUIRED		REQUIRED	
21	SOLENOID VALVE / JUNCTION BOX	NOT REQUIRED		REQUIRED	
22	HAND WHEEL (SIDE MOUNTED) / LOCAL POSITIONER INDICATOR	REQUIRED		REQUIRED	
23	SERVICE CONDITIONS (LOAD)	FLOW (T/HR)	INLET PR KG/CM2(A)	OUTLET PR. KG/CM2(A)	TEMP DEG. C
24	MIN(0.5% MU)	12.8	8.2	0.9	33
25	1% MU	25.6	6.3	1.1	33
26	NORMAL(3% MU)	76.8	4.5	1.3	33
27	MAX(.5% MU)	128	3.5	1.6	33
31	MAX SHUT OFF PRESSURE,BODY DESIGN PRESSURE (KG/CM2 (g)), TEMP (DEG C)	12		12/VACUUM	50
32	IBR FORM-IIIC	NOT REQUIRED			
33	PROCESS CONDITION	--			
34	MODEL OF CONTROL VALVE	BIDDER TO FURNISH			
35	SIZE OF CONTROL VALVE	BIDDER TO FURNISH			
D. GUARENTEED PERFORMANCE REQUIREMENTS					
36	LINEARITY / HYSTERISIS / SENSITIVITY / OVERALL ACCURACY	+/- 1%	+/- 1%	+/- 0.5%	+/- 2%

	TECHNICAL SPECIFICATION & DATA SHEET FOR CONTROL VALVE WITH ACCESSORIES (PNEUMATICALLY OPERATED)	Specification No.: PE-TS-508-145-H104			
		Rev. No. 00			
		Date :30.12.2024			
SPECIFICATION & DATA SHEET FOR CONTROL VALVE					
A. GENERAL INFORMATION					
1	TAG NUMBER / SERVICE	DMV-78		EMERGENCY DM MU TO HOTWELL	
2	LOCATION / DUTY	INDOOR		MODULATING	
B. DESIGN CODES & STANDARDS					
3	CODE / STANDARD	REFER SPECIFIC NOTES			
C. TECHNICAL PARAMETERS / DESIGN FEATURES					
4	PIPE SIZE (OD X THK) mm INLET / OUTLET	INLET	219.1 x 3.76	OUTLET	219.1 x 3.76
5	PIPE MATERIAL INLET / OUTLET	SA 312 TP 304 (ERW)		SA 312 TP 304 (ERW)	
6	VALVE BODY TYPE / MATERIAL / SIZE OF VALVE	GLOBE	A351CF8M	BIDDER TO FURNISH	
7	GUIDING / NO. OF PORTS / TRIM FORM	CAGE	ONE	EQ %	
8	CAGE TYPE / CAGE MATERIAL / GUIDE BUSH Material	STANDARD	SS316	SS316	
9	MATERIAL: PLUG / STEM/SEAT/YOKE	SS316	SS316	SS316	CARBON STEEL
10	PACKING MATERIAL / NOS / TYPE	GRAFOIL	DOUBLE	V-CHEVRON	
11	END CONNECTION / ANSI RATING / BONNET TYPE	BWE	BIDDER TO FURNISH	STANDARD	
12	FLOW ACTION / VALVE OUTLET VELOCITY	< 7 M/SEC(WATER)			
13	LEAKAGE CLASS / NOISE LEVEL (dBA)	V		< 85 dBA	
14	VACUUM SERVICE / ANTI CAVITATION TRIM	YES		NO	
15	ACTUATOR TYPE	PNEUMATIC			
16	TRAVEL TIME FOR OPEN TO CLOSE, CLOSE TO OPEN	LESS THAN 10 SEC			
17	VALVE POSN. ON: ELECTRICAL SIGNAL FAILURE / SUPPLY AIR FAILURE	TO CLOSE		STAYPUT	
18	SMART POSITIONER / POSITION LIMIT SWITCH	REQUIRED(HART)		NOT REQUIRED	
19	POSITION TRANSMITTER / E/P CONVERTER	PART OF SMART POSITIONER		PART OF SMART POSITIONER	
20	AIR FILTER REGULATOR / AIR LOCK RELAY	REQUIRED		REQUIRED	
21	SOLENOID VALVE / JUNCTION BOX	NOT REQUIRED		REQUIRED	
22	HAND WHEEL (SIDE MOUNTED) / LOCAL POSITIONER INDICATOR	REQUIRED		REQUIRED	
23	SERVICE CONDITIONS (LOAD)	FLOW (T/HR)	INLET PR KG/CM2(A)	OUTLET PR. KG/CM2(A)	TEMP DEG. C
24	MIN(5% MU)	128	8.5	0.9	33
25	NORMAL(10% MU)	256	7	1.1	33
26	MAX(PUMP CAPACITY)	300	6.5	1.3	33
31	MAX SHUT OFF PRESSURE,BODY DESIGN PRESSURE (KG/CM2 (g)), TEMP (DEG C)	12		12/VACUUM	50
32	IBR FORM-IIIC	NOT REQUIRED			
33	PROCESS CONDITION	--			
34	MODEL OF CONTROL VALVE	BIDDER TO FURNISH			
35	SIZE OF CONTROL VALVE	BIDDER TO FURNISH			
D. GUARENTEED PERFORMANCE REQUIREMENTS					
36	LINEARITY / HYSTERISIS / SENSITIVITY / OVERALL ACCURACY	+/- 1%	+/- 1%	+/- 0.5%	+/- 2%

बी एच ई एल BHEL	TECHNICAL SPECIFICATION & DATA SHEET FOR CONTROL VALVE WITH ACCESSORIES (PNEUMATICALLY OPERATED)	Specification No.: PE-TS-508-145-H104			
		Rev. No. 00			
		Date :30.12.2024			
SPECIFICATION & DATA SHEET FOR CONTROL VALVE					
A. GENERAL INFORMATION					
1	TAG NUMBER / SERVICE	ASV-16		DRAIN OF AUX STEAM FROM EXISTING UNIT HEADER TO UNIT F/T	
2	LOCATION / DUTY	INDOOR		MODULATING	
B. DESIGN CODES & STANDARDS					
3	CODE / STANDARD	REFER SPECIFIC NOTES			
C. TECHNICAL PARAMETERS / DESIGN FEATURES					
4	PIPE SIZE (OD X THK) mm	INLET	60.3 X 5.54	OUTLET	60.3 X 5.54
5	PIPE MATERIAL INLET / OUTLET	SA 106 GR B		SA 106 GR B	
6	VALVE BODY TYPE / MATERIAL/ SIZE OF VALVE	GLOBE	A217WC9	BIDDER TO FURNISH	
7	GUIDING / NO. OF PORTS / TRIM FORM	CAGE	ONE	EQ %	
8	CAGE TYPE / CAGE MATERIAL / GUIDE BUSH Material	LO-DB	SS 316 STELLITED	SS 316 STELLITED	
9	MATERIAL: PLUG / STEM / SEAT / YOKE	SS 316 STELLITED	SS 316 STELLITED	SS 316 STELLITED	CARBON STEEL
10	PACKING MATERIAL / NOS / TYPE	GRAFOIL	DOUBLE	STANDARD	
11	END CONNECTION / ANSI RATING / BONNET TYPE	BWE	BIDDER TO FURNISH	EXTENDED	
12	VALVE OUTLET VELOCITY	< 150 M/SEC(STEAM)			
13	LEAKAGE CLASS / NOISE LEVEL (dBA)	V		< 85 dBA	
14	VACUUM SERVICE / ANTI CAVITATION TRIM	YES		YES	
15	ACTUATOR TYPE	PNEUMATIC			
16	TRAVEL TIME FOR OPEN TO CLOSE, CLOSE TO OPEN	LESS THAN 10 SEC			
17	VALVE POSN. ON: ELECTRICAL SIGNAL FAILURE / SUPPLY AIR FAILURE	TO OPEN		STAYPUT	
18	SMART POSITIONER / POSITION LIMIT SWITCH	REQUIRED(PROFIBUS)		NOT REQUIRED	
19	POSITION TRANSMITTER / E/P CONVERTER	PART OF SMART POSITIONER		PART OF SMART POSITIONER	
20	AIR FILTER REGULATOR / AIR LOCK RELAY	REQUIRED		REQUIRED	
21	SOLENOID VALVE / JUNCTION BOX	NOT REQUIRED		REQUIRED	
22	HAND WHEEL (SIDE MOUNTED) / LOCAL POSITIONER INDICATOR	REQUIRED		REQUIRED	
23	SERVICE CONDITIONS	FLOW (T/HR)	INLET PR KG/CM2(A)	OUTLET PR. KG/CM2(A)	TEMP DEG. C
24	MIN CONDENSATE	4	16	2.2	200
25	MIAX CONDENSATE	10	16	2.2	200
29	MAX SHUT OFF PRESSURE,BODY DESIGN PRESSURE (KG/CM2 (g)) ,TEMP (DEG C)	20			250
30	IBR FORM-IIIC	REQUIRED			
31	PROCESS CONDITION	CAVITATION, HIGH DP			
32	MODEL OF CONTROL VALVE	BIDDER TO FURNISH			
33	SIZE OF CONTROL VALVE	BIDDER TO FURNISH			
D. GUARANTEED PERFORMANCE REQUIREMENTS					
34	LINEARITY / HYSTERISIS / SENSITIVITY / OVERALL ACCURACY	+/- 1%	+/- 1%	+/- 0.5%	+/- 2%

File No. PEM-PG0MM(24)/1/2025-PS-PEM-PGI-1 (Computer No. 134626)
Generated from eOffice by Manoj Bhardwaj, ENGINEER(MB)-PG I-1-PS-PEM, ENGINEER, BHARAT HEAVY ELECTRICAL LTD on 07/01/2025 03:39 pm

	TECHNICAL SPECIFICATION & DATA SHEET FOR CONTROL VALVE WITH ACCESSORIES (PNEUMATICALLY OPERATED)	Specification No.: PE-TS-508-145-H104			
		Rev. No. 00			
		Date :30.12.2024			
SPECIFICATION & DATA SHEET FOR CONTROL VALVE					
A. GENERAL INFORMATION					
1	TAG NUMBER / SERVICE	DMCWSG12		DMCW SYSYTEM FOR SG AUX'S	
2	LOCATION / DUTY	INDOOR		MODULATING	
B. DESIGN CODES & STANDARDS					
3	CODE / STANDARD	REFER SPECIFIC NOTES			
C. TECHNICAL PARAMETERS / DESIGN FEATURES					
4	PIPE SIZE (OD X THK) mm INLET / OUTLET	INLET	406.4X6.0	OUTLET	406.4X6.0
5	PIPE MATERIAL INLET / OUTLET	CS IS 2062		CS IS 2062	
6	VALVE BODY TYPE / MATERIAL / SIZE OF VALVE	GLOBE	A216WCB	BIDDER TO FURNISH	
7	GUIDING / NO. OF PORTS / TRIM FORM	CAGE	ONE	LINEAR	
8	CAGE TYPE / CAGE MATERIAL / GUIDE BUSH Material	STANDARD	SS 316 STELLITED	SS 316 STELLITED	
9	MATERIAL: PLUG / STEM/SEAT/YOKE	SS 316 STELLITED	SS 316 STELLITED	SS 316 STELLITED	CARBON STEEL
10	PACKING MATERIAL / NOS / TYPE	GRAFOIL	SINGLE	STANDARD	
11	END CONNECTION / ANSI RATING / BONNET TYPE	BWE	BIDDER TO FURNISH	STANDARD	
12	FLOW ACTION / VALVE OUTLET VELOCITY	< 7 M/SEC(WATER)			
13	LEAKAGE CLASS / NOISE LEVEL (dBA)	IV		< 85 dBA	
14	VACUUM SERVICE / ANTI CAVITATION TRIM	NO		NO	
15	ACTUATOR TYPE	PNEUMATIC			
16	TRAVEL TIME FOR OPEN TO CLOSE, CLOSE TO OPEN	LESS THAN 10 SEC			
17	VALVE POSN. ON: ELECTRICAL SIGNAL FAILURE / SUPPLY AIR FAILURE	TO CLOSE		STAYPUT	
18	SMART POSITIONER / POSITION LIMIT SWITCH	REQUIRED(PROFIBUS)		NOT REQUIRED	
19	POSITION TRANSMITTER / E/P CONVERTER	PART OF SMART POSITIONER		PART OF SMART POSITIONER	
20	AIR FILTER REGULATOR / AIR LOCK RELAY	REQUIRED		REQUIRED	
21	SOLENOID VALVE / JUNCTION BOX	REQUIRED		REQUIRED	
22	HAND WHEEL (SIDE MOUNTED) / LOCAL POSITIONER INDICATOR	REQUIRED		REQUIRED	
23	SERVICE CONDITIONS (LOAD)	FLOW (T/HR)	INLET PR KG/CM2(A)	OUTLET PR. KG/CM2(A)	TEMP DEG. C
24	NORMAL	925	7.3	4.3	38
25	MINIMUM	0	7.3	4.3	38
26	MAX SHUT OFF PRESSURE,BODY DESIGN PRESSURE (KG/CM2 (g)), TEMP (DEG C)	10			60
27	IBR FORM-IIIC	NOT REQUIRED			
28	PROCESS CONDITION	--			
29	MODEL OF CONTROL VALVE	BIDDER TO FURNISH			
30	SIZE OF CONTROL VALVE	BIDDER TO FURNISH			
D. GUARENTEED PERFORMANCE REQUIREMENTS					
31	LINEARITY / HYSTERISIS / SENSITIVITY / OVERALL ACCURACY	+/- 1%	+/- 1%	+/- 0.5%	+/- 2%

File No. PEM-PG0MM(24)/1/2025-PS-PEM-PGI-1 (Computer No. 134626)
Generated from eOffice by Manoj Bhardwaj, ENGINEER(MB)-PG I-1-PS-PEM, ENGINEER, BHARAT HEAVY ELECTRICAL LTD on 07/01/2025 03:39 pm

	TECHNICAL SPECIFICATION & DATA SHEET FOR CONTROL VALVE WITH ACCESSORIES (PNEUMATICALLY OPERATED)	Specification No.: PE-TS-508-145-H104			
		Rev. No. 00			
		Date :30.12.2024			
SPECIFICATION & DATA SHEET FOR CONTROL VALVE					
A. GENERAL INFORMATION					
1	TAG NUMBER / SERVICE	DMCW18		DMCW SYSYTEM FOR TG AUX'S	
2	LOCATION / DUTY	INDOOR		MODULATING	
B. DESIGN CODES & STANDARDS					
3	CODE / STANDARD	REFER SPECIFIC NOTES			
C. TECHNICAL PARAMETERS / DESIGN FEATURES					
4	PIPE SIZE (OD X THK) mm INLET / OUTLET	INLET	457X6.0	OUTLET	457X6.0
5	PIPE MATERIAL INLET / OUTLET	CS IS 2062		CS IS 2062	
6	VALVE BODY TYPE / MATERIAL / SIZE OF VALVE	GLOBE	A216WCB	BIDDER TO FURNISH	
7	GUIDING / NO. OF PORTS / TRIM FORM	CAGE	ONE	LINEAR	
8	CAGE TYPE / CAGE MATERIAL / GUIDE BUSH Material	STANDARD	SS 316 STELLITED	SS 316 STELLITED	
9	MATERIAL: PLUG / STEM/SEAT/YOKE	SS 316 STELLITED	SS 316 STELLITED	SS 316 STELLITED	CARBON STEEL
10	PACKING MATERIAL / NOS / TYPE	GRAFOIL	SINGLE	STANDARD	
11	END CONNECTION / ANSI RATING / BONNET TYPE	BWE	BIDDER TO FURNISH	STANDARD	
12	FLOW ACTION / VALVE OUTLET VELOCITY	< 7 M/SEC(WATER)			
13	LEAKAGE CLASS / NOISE LEVEL (dBA)	IV		< 85 dBA	
14	VACUUM SERVICE / ANTI CAVITATION TRIM	NO		NO	
15	ACTUATOR TYPE	PNEUMATIC			
16	TRAVEL TIME FOR OPEN TO CLOSE, CLOSE TO OPEN	LESS THAN 10 SEC			
17	VALVE POSN. ON: ELECTRICAL SIGNAL FAILURE / SUPPLY AIR FAILURE	TO CLOSE		STAYPUT	
18	SMART POSITIONER / POSITION LIMIT SWITCH	REQUIRED(PROFIBUS)		NOT REQUIRED	
19	POSITION TRANSMITTER / E/P CONVERTER	PART OF SMART POSITIONER		PART OF SMART POSITIONER	
20	AIR FILTER REGULATOR / AIR LOCK RELAY	REQUIRED		REQUIRED	
21	SOLENOID VALVE / JUNCTION BOX	REQUIRED		REQUIRED	
22	HAND WHEEL (SIDE MOUNTED) / LOCAL POSITIONER INDICATOR	REQUIRED		REQUIRED	
23	SERVICE CONDITIONS (LOAD)	FLOW (T/HR)	INLET PR KG/CM2(A)	OUTLET PR. KG/CM2(A)	TEMP DEG. C
24	NORMAL	1084	5	2.7	38
25	MIMIMUM	0	5	2.7	38
26	MAX SHUT OFF PRESSURE,BODY DESIGN PRESSURE (KG/CM2 (g)), TEMP (DEG C)	10			60
27	IBR FORM-IIIC	NOT REQUIRED			
28	PROCESS CONDITION	--			
29	MODEL OF CONTROL VALVE	BIDDER TO FURNISH			
30	SIZE OF CONTROL VALVE	BIDDER TO FURNISH			
D. GUARENTEED PERFORMANCE REQUIREMENTS					
31	LINEARITY / HYSTERISIS / SENSITIVITY / OVERALL ACCURACY	+/- 1%	+/- 1%	+/- 0.5%	+/- 2%

File No. PEM-PG0MM(24)/1/2025-PS-PEM-PGI-1 (Computer No. 134626)
Generated from eOffice by Manoj Bhardwaj, ENGINEER(MB)-PG I-1-PS-PEM, ENGINEER, BHARAT HEAVY ELECTRICAL LTD on 07/01/2025 03:39 pm

बी एच ई एल BHEL	TECHNICAL SPECIFICATION & DATA SHEET FOR CONTROL VALVE WITH ACCESSORIES (PNEUMATICALLY OPERATED)	Specification No.: PE-TS-508-145-H104			
		Rev. No. 00			
		Date :30.12.2024			
DATA SHEET FOR CONTROL VALVE ACCESSORIES TO BE CONFIRMED BY BIDDER					
1	SMART POSITIONER	SMART POSITIONER (HART / PROFIBUS). Refer detailed Specification			
2	AFR CASING MATERIAL / FILTER SIZE / INLET - OUTLET PRESSURE (KG/CM2) / OUTPUT GAUGE	SINTERED BRONZE	5 MICRON	5.0 - 8.0	REQUIRED
3	AIR LOCK INLET-OUTLET PRESSURE (KG/CM2) / AFR AUTO DRAIN FEATURE	5.0 - 8.0		REQUIRED	
4	AIR LOCK RESET TYPE / VENT PLUG	AUTO		REQUIRED	
5	LIMIT SWITCH POSITION NO. / CONTACT TYPE / ENCLOSURE CLASS /CONTACT RATING	4(2-OPEN, 2-CLOSE)	4 X SPDT	IP-65	0.5A,24 V DC / 5A,230 V AC
6	SOV BODY MATERIAL / OPERATION / VOLTAGE / TYPE	BRASS	STAYPUT	24 V DC	3 WAY (UNIVERSAL OPERATION TYPE)
7	SOV COIL INSULATION CLASS / ENCLOSURE CLASS	H		IP-65	
8	JB MATERIAL / NO OF WAYS / ENCLOSURE CLASS	4 mm thick FRP	36	IP-65	
9	JB CABLE GLAND TYPE / MATERIAL / QUANTITY (PER CV) / JB TB TYPE	YES- DOUBLE COMPRESSION TYPE	Ni-PLATED	TWO	CAGE CLAMP
10	HAND WHEEL MOUNTING POSITION / POSITION INDICATOR / LOCAL POSITION INDICATOR	SIDE MOUNTED	REQUIRED	REQUIRED	
11	TUBING (ADDITIONAL TO INTEGRAL TUBING) /MATERIAL / SIZE / LENGTH IN METRES (PER CV)	REQUIRED	SS 316	1/4 "	12
12	FITTINGS AS PER HOOK UP DIAGRAM / FOR CONNECTION TO AIR FILTER REGULATOR	REQUIRED		REQUIRED	
13	FITTINGS FOR CONNECTION TO AIR LOCK RELAY / FOR CONNECTION TO IA HEADER ISOLATION VALVE	REQUIRED		REQUIRED	
14	EQUAL TEEs / CONNECTORS	REQUIRED		REQUIRED	
15	VALVE DIAGNOSTIC AND CONFIGURATION SOFTWARE	REQUIRED		REQUIRED	

File No. PEM-PG0MM(24)/1/2025-PS-PEM-PGI-1 (Computer No. 134626)

Generated from eOffice by Manoj Bhardwaj, ENGINEER(MB)-PG I-1-PS-PEM, ENGINEER, BHARAT HEAVY ELECTRICAL LTD on 07/01/2025 03:39 pm

	MANUFACTURER/BIDDER/ SUPPLIER NAME & ADDRESS	STANDARD QUALITY PLAN		SPEC. NO : --	DATE: --
		CUSTOMER :--		QP NO.: PE-QP-999-145-H 006 REV 00	DATE: 04.01.2024
		PROJECT: --		PO NO.: --	DATE: --
		ITEM: CONTROL VALVE	SYSTEM: S&CE		SHEET 1 OF 8

SL NO.	COMPONENT & OPERATIONS	CHARACTERISTIC CHECKED	CATE GORY	TYPE OF CHECK	QUANTUM OF CHECK		REFERENCE DOCUMENT	ACCEPTANCE NORMS	FORMAT OF RECORD	AGENCY				REMARKS
	2	3	4	5	6		7	8	9	*	**			
					M	B/C				D	M	B	C	
1.0	**RAW MATERIAL**													
1.1	Body & Bonnet castings/forgings ,plug,valve stem, seat ring/cage	Physical, Chemical properties	MA	Physical, Chemical tests	100%	10%	Approved drg/ datasheet	Approved drg/data sheet	Test Certificate	√	P/ W	V		
		Heat Treatment	MA	Review of H.T. Certificate	100%	10%	Approved drg/ datasheet	Approved drg/data sheet	Test Certificate	√	P/ W	V		1. Applicable for body /bonnet only 2. IBR certificate(if applicable) to be verified.
		Internal quality of castings/forgings	MA	RT for Body & UT for Bonnet	100%	10%	ASME B 16.34	ASME B 16.34	Test Report/ Film	√	P/ W	V		Applicable for body and bonnet for rating ANSI 900 and above.
		Surface Quality	MA	1.Visual	100%	10%	ANSI/ MSS-SP-55	ANSI/ MSS-SP-55	Inspection Report	√	P/ W	V		Applicable for body/bonnet only.
		Pressure Test for shell	MA	Hyd. Test	100%	10%	ISA-S-75.19	ISA-S-75.19	Inspection Report	√	P/ W	V		For Body and Bonnet after machining.

BHEL						BIDDER/ SUPPLIER		FOR CUSTOMER REVIEW & APPROVAL			
ENGINEERING			QUALITY			Sign & Date		Doc No:			
	Name	Sign & Date		Name	Sign & Date	Seal			Name	Sign & Date	Seal
Prepared by:	CHETAN MALIK		Checked by:	SUMAN NAKWAL				Reviewed by:			
Reviewed by:	SURESH CHAND SHARMA		Reviewed by:	HARISH KUMAR				Approved by:			
Approved by:	GIRISH BHAGCHANDANI										

File No. PEM-PG0MM(24)/1/2025-PS-PEM-PGI-1 (Computer No. 134626)

Generated from eOffice by Manoj Bhardwaj, ENGINEER(MB)-PG I-1-PS-PEM, ENGINEER, BHARAT HEAVY ELECTRICAL LTD on 07/01/2025 03:39 pm

	MANUFACTURER/BIDDER/ SUPPLIER NAME & ADDRESS	STANDARD QUALITY PLAN	SPEC. NO : --	DATE: --
		CUSTOMER :--	QP NO.: PE-QP-999-145-H 006 REV 00	DATE: 04.01.2024
		PROJECT: --	PO NO.: --	DATE: --
		ITEM: CONTROL VALVE / SYSTEM: S&CE		SHEET 2 OF 8

SL NO.	COMPONENT & OPERATIONS	CHARACTERISTIC CHECKED	CATE GORY	TYPE OF CHECK	QUANTUM OF CHECK		REFERENCE DOCUMENT	ACCEPTANCE NORMS	FORMAT OF RECORD	AGENCY				REMARKS
	2	3	4	5	6		7	8	9	*	**			
					M	B/C				D	M	B	C	
1.2	Diaphragm	Surface Quality	MA	Visual	100%	10%	Mfr. standard	COC./Test Certificate	COC/Test Certificate	√	P/V	V		
		Hardness	MA	Measurement	100%	10%	Mfr. standard	COC/Test Certificate	COC/ Test Certificate	√	P/V	V		
		Endurance/ Life cycle	MA	Cyclic Test 10,000 cycles	One/ type	One/ type	Mfr. standard	No damage	COC/Test Certificate	√	P/V	V		
1.3	Spring	Composition	MA	Chemical-Analysis	One Sample/ Heat	One Sample/ Heat	Mfr. Standard	COC/Test Certificate	COC/Test Certificate	√	P/V	V		
		Mech. Properties	MA	Mech. Test	One Sample/ Heat	One Sample/ Heat	Mfr. Standard	COC/Test Certificate	COC/Test Certificate	√	P/V	V		
		Performance	MA	1.Stiffness Ratio	100%	10%	Mfr. standard	COC/Test Certificate	COC/Test Certificate	√	P/V	V		
				2.Scragging	100%	10%	Mfr. standard	COC/Test Certificate	COC/Test Certificate	√	P/V	V		
				3.Cyclic Test (Endurance)	One/ type	One/ type	Mfr. standard	COC/Test Certificate	COC/Test Certificate	√	P/V	V		

BHEL						BIDDER/ SUPPLIER		FOR CUSTOMER REVIEW & APPROVAL			
ENGINEERING			QUALITY			Sign & Date		Doc No:			
	Name	Sign & Date		Name	Sign & Date	Seal			Name	Sign & Date	Seal
Prepared by:	CHETAN MALIK		Checked by:	SUMAN NAKWAL				Reviewed by:			
Reviewed by:	SURESH CHAND SHARMA		Reviewed by:	HARISH KUMAR				Approved by:			
Approved by:	GIRISH BHAGCHANDANI										

38

	MANUFACTURER/BIDDER/ SUPPLIER NAME & ADDRESS	STANDARD QUALITY PLAN	SPEC. NO : --	DATE: --
		CUSTOMER :--	QP NO.: PE-QP-999-145-H 006 REV 00	DATE: 04.01.2024
		PROJECT: --	PO NO.: --	DATE: --
		ITEM: CONTROL VALVE / SYSTEM: S&CE		SHEET 3 OF 8

SL NO.	COMPONENT & OPERATIONS	CHARACTERISTIC CHECKED	CATE GORY	TYPE OF CHECK	QUANTUM OF CHECK		REFERENCE DOCUMENT	ACCEPTANCE NORMS	FORMAT OF RECORD	AGENCY				REMARKS
	2	3	4	5	6		7	8	9	*	**			
					M	B/C				D	M	B	C	
				4. Dimension (Measurement)	One sample/ Lot	One sample /Lot	Mfr. Standard	COC/Test Certificate	COC/Test Certificate	√	P/ V	V		
2.0	**IN PROCESS INSPECTION**													
2.1	After machining, i, Body ii Bonnet iii Plug iv Valve Stem v seat ring vi cage	Surface flaws	MA	Visual & MT/PT	100% (on accessi ble surfaces)	10%	ASME B 16.34	ASME B 16.34	Inspection Report	√	P/ W	V		Butt weld ends shall be included.
		Dimensional checks	MA	Measurement	100%	10%	Appd Drg.	Appd Drg.	Inspection Report	√	P/ W	V		
		Hard Facing (wherever applicable)	MA	Hardness Measurement	One sample/ Lot	One sample /Lot	Appd Datasheet	Appd Datasheet	Inspection Report	√	P/ W	V		

BHEL						BIDDER/ SUPPLIER		FOR CUSTOMER REVIEW & APPROVAL			
ENGINEERING			QUALITY			Sign & Date		Doc No:			
	Name	Sign & Date		Name	Sign & Date	Seal			Name	Sign & Date	Seal
Prepared by:	CHETAN MALIK		Checked by:	SUMAN NAKWAL				Reviewed by:			
Reviewed by:	SURESH CHAND SHARMA		Reviewed by:	HARISH KUMAR				Approved by:			
Approved by:	GIRISH BHAGCHANDANI										

File No. PEM-PG0MM(24)/1/2025-PS-PEM-PGI-1 (Computer No. 134626)

Generated from eOffice by Manoj Bhardwaj, ENGINEER(MB)-PG I-1-PS-PEM, ENGINEER, BHARAT HEAVY ELECTRICAL LTD on 07/01/2025 03:39 pm

	MANUFACTURER/BIDDER/ SUPPLIER NAME & ADDRESS	STANDARD QUALITY PLAN	SPEC. NO : --	DATE: --
		CUSTOMER :--	QP NO.: PE-QP-999-145-H 006 REV 00	DATE: 04.01.2024
		PROJECT: --	PO NO.: --	DATE: --
		ITEM: CONTROL VALVE / SYSTEM: S&CE		SHEET 4 OF 8

SL NO.	COMPONENT & OPERATIONS	CHARACTERISTIC CHECKED	CATE GORY	TYPE OF CHECK	QUANTUM OF CHECK		REFERENCE DOCUMENT	ACCEPTANCE NORMS	FORMAT OF RECORD		AGENCY			REMARKS
	2	3	4	5	6		7	8	9	*	**			
					M	B/C				D	M	B	C	
FINAL TESTING/INSPECTION														
3.0	**TESTS ON COMPLETED VALVE**													
3.1	Actuator Chamber	Leakage	MA	Pneumatic Test	100%	10%	Mfr. standard	No Leakage	Test Certificate	√	P/W	W		
3.2	Body	Leakage (Body Mount Leakage)	MA	Hydro Test	100%	10%	ISA-S-75.19/	No Leakage	Test Certificate	√	P/W	W		
3.3	Seat Leakage	Seat Leakage	MA	Pneumatic / WaterTest	100%	10%	FCI-70.2	Approved Datasheet	Test Certificate	√	P/W	W		
4.0	**OPERATION TEST ON COMPLETED VALVE ASSEMBLY**	Valve Travel	MA	Measurement	100%	10%	Approved datasheet	Approved Datasheet	Inspection Report	√	P/W	W		
		Opening / Closing Time	MA	Measurement	100%	10%	Approved datasheet	Approved Datasheet	Inspection Report	√	P/W	W		
		Linearity / Cam characteristic	MA	Measurement	100%	10%	Approved datasheet	Approved Datasheet	Inspection Report	√	P/W	W		
		Repeatability	MA	Measurement	100%	10%	Approved datasheet	Approved Datasheet	Inspection Report	√	P/W	W		
		Hysterisis	MA	Measurement	100%	10%	Approved datasheet	Approved Datasheet	Inspection Report	√	P/W	W		
		Sensitivity	MA	Measurement	100%	10%	Approved datasheet	Approved Datasheet	Inspection Report	√	P/W	W		

BHEL						BIDDER/ SUPPLIER		FOR CUSTOMER REVIEW & APPROVAL			
ENGINEERING			QUALITY			Sign & Date		Doc No:			
	Name	Sign & Date		Name	Sign & Date	Seal			Name	Sign & Date	Seal
Prepared by:	CHETAN MALIK		Checked by:	SUMAN NAKWAL				Reviewed by:			
Reviewed by:	SURESH CHAND SHARMA		Reviewed by:	HARISH KUMAR				Approved by:			
Approved by:	GIRISH BHAGCHANDANI										

File No. PEM-PG0MM(24)/1/2025-PS-PEM-PGI-1 (Computer No. 134626)

Generated from eOffice by Manoj Bhardwaj, ENGINEER(MB)-PG I-1-PS-PEM, ENGINEER, BHARAT HEAVY ELECTRICAL LTD on 07/01/2025 03:39 pm

	MANUFACTURER/BIDDER/ SUPPLIER NAME & ADDRESS	STANDARD QUALITY PLAN	SPEC. NO : --	DATE: --
		CUSTOMER :--	QP NO.: PE-QP-999-145-H 006 REV 00	DATE: 04.01.2024
		PROJECT: --	PO NO.: --	DATE: --
		ITEM: CONTROL VALVE / SYSTEM: S&CE		SHEET 5 OF 8

SL NO.	COMPONENT & OPERATIONS	CHARACTERISTIC CHECKED	CATE GORY	TYPE OF CHECK	QUANTUM OF CHECK		REFERENCE DOCUMENT	ACCEPTANCE NORMS	FORMAT OF RECORD	AGENCY				REMARKS
	2	3	4	5	6		7	8	9	*	**			
					M	B/C				D	M	B	C	
		Accuracy(Overall)	MA	Measurement	100%	10%	Approved datasheet	Approved Datasheet	Inspection Report					
		Control Valve characteristics / CV Test	MA	Measurement (Press. vs. discharge and discharge vs opening 0-100% in steps of 10%)	One per type	One per type	Mfr. Procedure	Approved Datasheet	Test Certificate	√	P/W	V		
		Operation of limit switch & solenoids and other accessories	MA	Function	100%	10%	Mfr. Procedure	Approved Datasheet	Inspection Report	√	P/W	W		On assembled Valve.
		Overall dimensions	MI	Visual and dimensional	100%	10%	Approved drg	Approved drg	Inspection Report	√	P/W	W		
		Pre-defined valve position in case of air / signal failure	MI	Visual and dimensional	100%	10%	Approved data sheet	Approved data sheet	Inspection Report	√	P/W	W		
		Stamping (for direction of flow), Tag No.	MA	Visual	100%	10%	Approved drg /datasheet	Approved drg /datasheet	Test Certificate	√	P/W	W		

BHEL						BIDDER/ SUPPLIER		FOR CUSTOMER REVIEW & APPROVAL			
ENGINEERING			QUALITY			Sign & Date		Doc No:			
	Name	Sign & Date		Name	Sign & Date	Seal			Name	Sign & Date	Seal
Prepared by:	CHETAN MALIK		Checked by:	SUMAN NAKWAL				Reviewed by:			
Reviewed by:	SURESH CHAND SHARMA		Reviewed by:	HARISH KUMAR				Approved by:			
Approved by:	GIRISH BHAGCHANDANI										

File No. PEM-PG0MM(24)/1/2025-PS-PEM-PGI-1 (Computer No. 134626)

Generated from eOffice by Manoj Bhardwaj, ENGINEER(MB)-PG I-1-PS-PEM, ENGINEER, BHARAT HEAVY ELECTRICAL LTD on 07/01/2025 03:39 pm

	MANUFACTURER/BIDDER/ SUPPLIER NAME & ADDRESS	STANDARD QUALITY PLAN		SPEC. NO : --	DATE: --
		CUSTOMER :--		QP NO.: PE-QP-999-145-H 006 REV 00	DATE: 04.01.2024
		PROJECT: --		PO NO.: --	DATE: --
		ITEM: CONTROL VALVE	SYSTEM: S&CE		SHEET 6 OF 8

SL NO.	COMPONENT & OPERATIONS	CHARACTERISTIC CHECKED	CATE GORY	TYPE OF CHECK	QUANTUM OF CHECK		REFERENCE DOCUMENT	ACCEPTANCE NORMS	FORMAT OF RECORD	AGENCY				REMARKS
	2	3	4	5	6		7	8	9	*	**			
					M	B/C				D	M	B	C	
5.0	**AUXILIARY ITEMS(Performance test of auxiliary items shall be performed on the completely assembled valve)** – Refer NOTE-3													
5.1	Air Filter Regulator	Performance Test	MA	Measurement	Each type	Each type	Mfr. Standard	No leakage	--	√	P/V	V		
		Overall leakage	MA	Visual(soap solution)	100 %	10%	Mfr. Standard	No leakage	--	√	P/V	V		
5.2	Air lock relay	Performance Test	MA	Leakage test	100%	10%	Mfr. Standard	No leakage	--	√	P/V	V		
5.3	Smart Positioner	Physical Verification Make/Model	MA	Visual	100%	10%	Approved drg/ datasheet	Approved drg/ datasheet	--	√	P/V	V		
		Degree of Protection	MA	IP/NEMA test	Each type	Each type	Relevant Standard	Relevant Standard	--	√	P/V	V		
		Calibration	MA	Measurement	Each type	Each type	Mfr. Standard	Mfr. Standard	--	√	P/V	V		
5.7	**Electrical items** (i) Limit Switches	Routine Test	MA	HV, IR, Continuity function	100%	10%	Approved Data sheet	Approved Data sheet	--	√	P/V	V		
		Degree of protection	MA	IP/NEMA Tests	One sample/ type	One sample/ Lot	Approved Data sheet	Approved Data sheet	--	√	P/V	V		

BHEL						BIDDER/ SUPPLIER		FOR CUSTOMER REVIEW & APPROVAL			
ENGINEERING			QUALITY			Sign & Date		Doc No:			
	Name	Sign & Date		Name	Sign & Date	Seal			Name	Sign & Date	Seal
Prepared by:	CHETAN MALIK		Checked by:	SUMAN NAKWAL				Reviewed by:			
Reviewed by:	SURESH CHAND SHARMA		Reviewed by:	HARISH KUMAR				Approved by:			
Approved by:	GIRISH BHAGCHANDANI										

File No. PEM-PG0MM(24)/1/2025-PS-PEM-PGI-1 (Computer No. 134626)

Generated from eOffice by Manoj Bhardwaj, ENGINEER(MB)-PG I-1-PS-PEM, ENGINEER, BHARAT HEAVY ELECTRICAL LTD on 07/01/2025 03:39 pm

	MANUFACTURER/BIDDER/ SUPPLIER NAME & ADDRESS	STANDARD QUALITY PLAN		SPEC. NO : --	DATE: --
		CUSTOMER :--		QP NO.: PE-QP-999-145-H 006 REV 00	DATE: 04.01.2024
		PROJECT: --		PO NO.: --	DATE: --
		ITEM: CONTROL VALVE	SYSTEM: S&CE		SHEET 7 OF 8

SL NO.	COMPONENT & OPERATIONS	CHARACTERISTIC CHECKED	CATE GORY	TYPE OF CHECK	QUANTUM OF CHECK		REFERENCE DOCUMENT	ACCEPTANCE NORMS	FORMAT OF RECORD	AGENCY				REMARKS
	2	3	4	5	6		7	8	9	*	**			
					M	B/C				D	M	B	C	
	(ii) Solenoids	Routine Test	MA	HV, IR, Continuity function	100%	10%	Approved Data sheet	Approved Data sheet	--	√	P/V	V		
		Degree of protection	MA	IP/NEMA Tests	One sample/ type	One sample /Lot	Approved Data sheet	Approved Data sheet	--	√	P/V	V		
	(iii)Position Transmitter(if provided externally)	Routine Test	MA	HV, IR, Continuity function	100%	10%	Approved Data sheet	Approved Data sheet	--	√	P/V	V		
		Degree of protection	MA	IP/NEMA Tests	One sample/ type	One sample /Lot	Approved Data sheet	Approved Data sheet	--	√	P/V	V		
6.0	**PAINTING**	Paint Thickness	MA	Measurement DFT check	100%	10%	Approved drg/data sheet	Approved drg/data sheet	Inspection Report	√	P/W	V		
7.0	**PACKING**	Soundness of Packing against transit damage	MA	Visual	100%	100%	Approved drg/data sheet	Approved drg/data sheet	Inspection Report	√	P/W	V		

BHEL						BIDDER/ SUPPLIER		FOR CUSTOMER REVIEW & APPROVAL			
ENGINEERING			QUALITY			Sign & Date		Doc No:			
	Name	Sign & Date		Name	Sign & Date	Seal			Name	Sign & Date	Seal
Prepared by:	CHETAN MALIK		Checked by:	SUMAN NAKWAL				Reviewed by:			
Reviewed by:	SURESH CHAND SHARMA		Reviewed by:	HARISH KUMAR				Approved by:			
Approved by:	GIRISH BHAGCHANDANI										

File No. PEM-PG0MM(24)/1/2025-PS-PEM-PGI-1 (Computer No. 134626)

Generated from eOffice by Manoj Bhardwaj, ENGINEER(MB)-PG I-1-PS-PEM, ENGINEER, BHARAT HEAVY ELECTRICAL LTD on 07/01/2025 03:39 pm

	MANUFACTURER/BIDDER/ SUPPLIER NAME & ADDRESS	STANDARD QUALITY PLAN		SPEC. NO : --	DATE: --
		CUSTOMER :--		QP NO.: PE-QP-999-145-H 006 REV 00	DATE: 04.01.2024
		PROJECT: --		PO NO.: --	DATE: --
		ITEM: CONTROL VALVE	SYSTEM: S&CE		SHEET 8 OF 8

SL NO.	COMPONENT & OPERATIONS	CHARACTERISTIC CHECKED	CATE GORY	TYPE OF CHECK	QUANTUM OF CHECK		REFERENCE DOCUMENT	ACCEPTANCE NORMS	FORMAT OF RECORD		AGENCY			REMARKS
	2	3	4	5	6		7	8	9	*	**			
					M	B/C				D	M	B	C	

NOTES:

1. Cv test shall be conducted at FCRI/ laboratory approved by Govt. Of India/BHEL approved Laboratory. Alternatively, valid Cv test certificate for a similar control valve (same size, same Cv, same trim characteristics) can be accepted.
2. Copies of all TC's (Test Certificates) for materials duly correlated with Heat Nos., TC's for electrical items and mechanical tests(Leak/Operation), C.O.C's (Certificates of Conformance) shall be submitted to BHEL for verification and acceptance.
3. Valve manufacturer to arrange for COC (Certificates of Conformance) for the tests w.r.t. control valve accessories mentioned at Sl. No. 5 of the QAP.

LEGENDS:

*RECORDS, INDENTIFIED WITH "TICK"(√) SHALL BE ESSENTIALLY INCLUDED BY SUPPLIER IN QA DOCUMENTATION,

** **M**:SUPPLIER / MANUFACTURER/ SUB-SUPPLIER/SUB-CONTRACTOR, , **B**: BHEL/ BHEL NOMINATED THIRD PARTY INSPECTION AGENCY, **C**: CUSTOMER, **P**:PERFORM,**W**:WITNESS, **V:**VERIFICATION,AS APPROPRIATE **MA**:MAJOR,**MI**:MINOR,**CR:**CRITICAL,**RT-**RADIOGRAPHIC TEST,**UT-**ULTRASONIC TEST,**PT-**DYE PENETRANT TEST,**MT-**MAGNETIC PARTICLE TEST

BHEL						BIDDER/ SUPPLIER		FOR CUSTOMER REVIEW & APPROVAL			
ENGINEERING			QUALITY			Sign & Date		Doc No:			
	Name	Sign & Date		Name	Sign & Date	Seal			Name	Sign & Date	Seal
Prepared by:	CHETAN MALIK		Checked by:	SUMAN NAKWAL				Reviewed by:			
Reviewed by:	SURESH CHAND SHARMA		Reviewed by:	HARISH KUMAR				Approved by:			
Approved by:	GIRISH BHAGCHANDANI										

File No. PEM-PG0MM(24)/1/2025-PS-PEM-PGI-1 (Computer No. 134626)

Generated from eOffice by Manoj Bhardwaj, ENGINEER(MB)-PG I-1-PS-PEM, ENGINEER, BHARAT HEAVY ELECTRICAL LTD on 07/01/2025 03:39 pm

STANDARD CONTROL VALVE HOOK-UP DIAGRAM (WITH SMART POSITIONER)

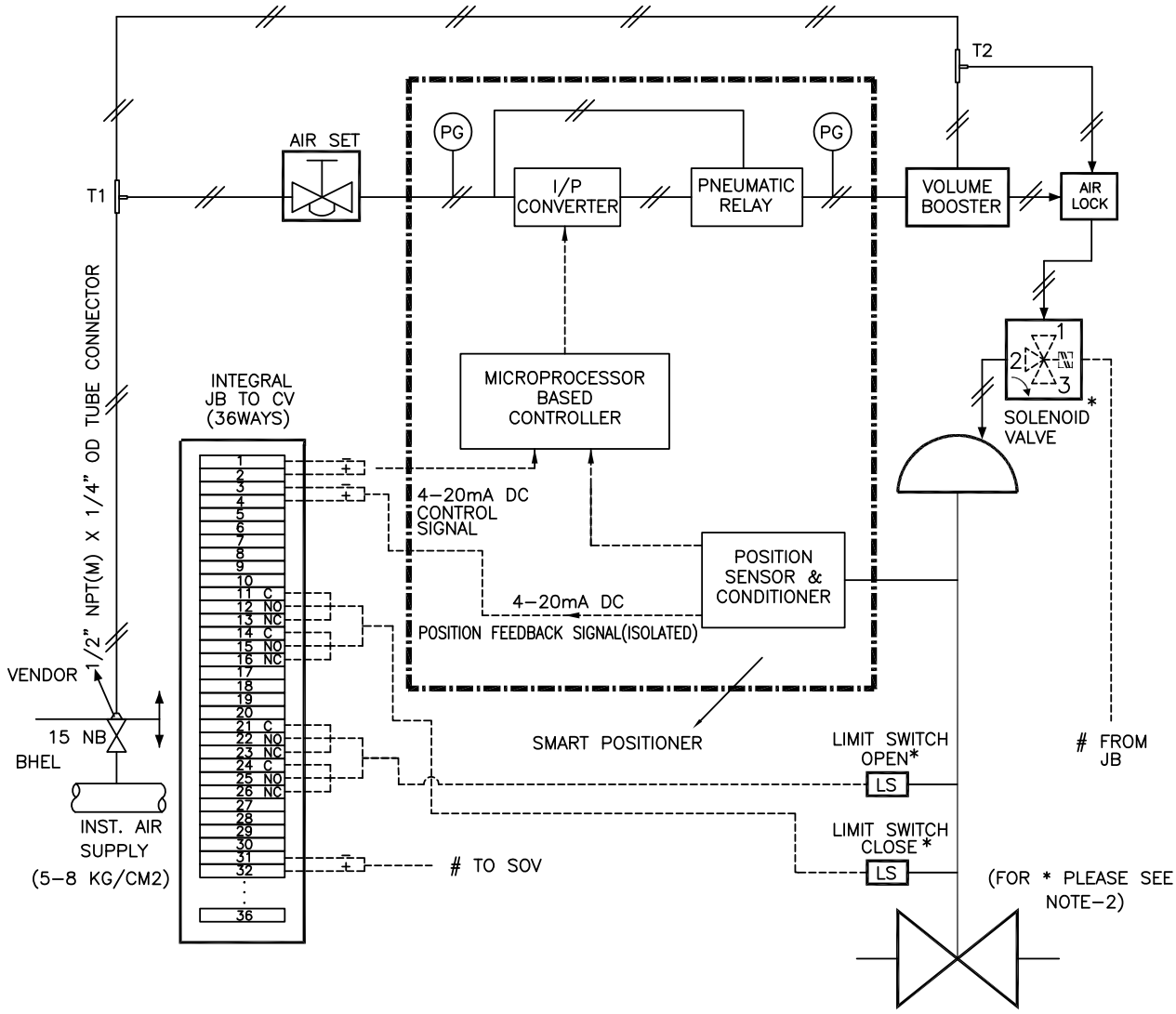

NOTES :–

1. POSITION OF EACH VALVE ON SUPPLY AIR FAILURE / ELECTRICAL SIGNAL FAILURE SHALL BE AS PER SPECIFICATION / DATA SHEET.
2. SOLENOID VALVE & LIMIT SWITCHES WILL BE PROVIDED ONLY FOR CONTROL VALVES IF INDICATED IN RESPECTIVE DATA SHEETS.
3. SOLENOID VALVES PORTS CONDITION:
   PORT 1 AND 2 SHALL BE CONNECTED UNDER DE–ENERGISED CONDITION.
   PORT 2 AND 3 SHALL BE CONNECTED UNDER ENERGISED CONDITION.
4. PRESSURE GAUGES REQUIRED FOR AIR SUPPLY & OUTPUT(S).
5. MOUNTING ACCESSORIES AS REQUIRED.
6. POSITION FEEDBACK SIGNAL SHALL BE 2 WIRE 4–20mA ISOLATED SIGNAL.
7. JB TERMINALS SHALL BE CAGE CLAMP TYPE SUITABLE FOR 2.5 SQ. MM COPPER WIRE. EXTERNAL CONNECTION, OF PLUG IN TYPE OR THROUGH CABLE GLAND, SHALL BE AS PER DATA SHEET
8. ALL APPLICABLE ACCESSORIES SHALL BE PROVIDED AS INDICATED IN THE INDIVIDUAL CONTROL VALVE DATA SHEET / ACCESSORIES DATA SHEET.
9. 12 METERS 1/4" SS TUBING (AS PER ACCESSORIES DATA SHEET) & 1 SET OF FITTINGS TO BE SUPPLIED FOR EACH CONTROL VALVE FOR CONNECTION TO ISO VLV AT INST AIR HEADER ON ONE END AND TO AIR LOCK RELAY/AIR FILTER REGULATOR ON THE OTHER END. ALL THE BRASS / SS FITTINGS SHALL BE DOUBLE COMPRESSION TYPE.
10. VOLUME BOOSTER (ALONG WITH TEE–T2 AND RELATED TUBING & CONNECTORS) SHALL BE PROVIDED IF REQUIRED. AIR CONNECTION TO VOLUME BOOSTER FROM TEE–T2 SHALL BE PROVIDED.

STANDARD CONTROL VALVE HOOK-UP DIAGRAM
(FOR ON / OFF TYPE)

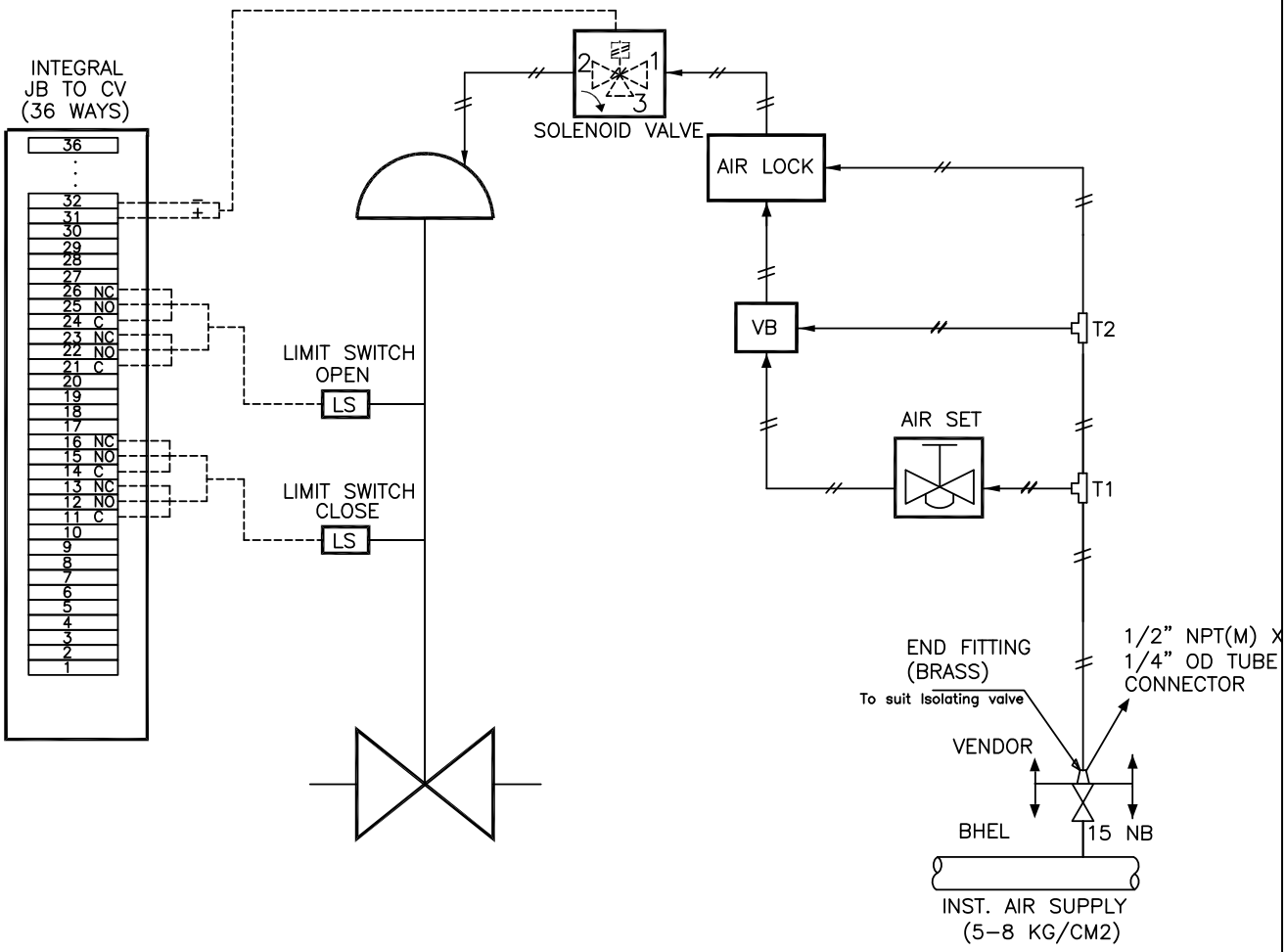

NOTES :–

1. POSITION OF EACH VALVE ON SUPPLY AIR FAILURE / ELECTRIC SIGNAL FAILURE SHALL BE AS PER SPECIFICATION / DATA SHEET.
2. SOLENOID VALVES PORTS CONDITION:
   PORT 1 AND 2 SHALL BE CONNECTED UNDER DE–ENERGISED CONDITION.
   PORT 2 AND 3 SHALL BE CONNECTED UNDER ENERGISED CONDITION.
3. MOUNTING ACCESSORIES AS REQUIRED.
4. JB TERMINALS SHALL BE CAGE CLAMP TYPE SUITABLE FOR 2.5 SQ. MM COPPER WIRE. EXTERNAL CONNECTION, OF PLUG IN TYPE OR THROUGH CABLE GLAND, SHALL BE AS PER DATA SHEET.
5. ALL APPLICABLE ACCESSORIES SHALL BE PROVIDED AS INDICATED IN THE INDIVIDUAL CONTROL VALVE DATA SHEET / ACCESSORIES DATA SHEET.
6. 12 METERS 1/4" SS TUBING (AS PER ACCESSORIES DATA SHEET) & 1 SET OF FITTINGS TO BE SUPPLIED FOR EACH CONTROL VALVE FOR CONNECTION TO ISO VLV AT INST AIR HEADER ON ONE END AND TO AIR LOCK RELAY/AIR FILTER REGULATOR ON THE OTHER END. ALL THE BRASS / SS FITTINGS SHALL BE DOUBLE COMPRESSION TYPE.

File No. PEM-PG0MM(24)/1/2025-PS-PEM-PGI-1 (Computer No. 134626)

Generated from eOffice by Manoj Bhardwaj, ENGINEER(MB)-PG I-I-PS-PEM, ENGINEER, BHARAT HEAVY ELECTRICAL LTD on 07/01/2025 03:39 pm

STANDARD CONTROL VALVE HOOK-UP DIAGRAM
(DOUBLE ACTING PISTON ACTUATOR WITH SMART POSITIONER)

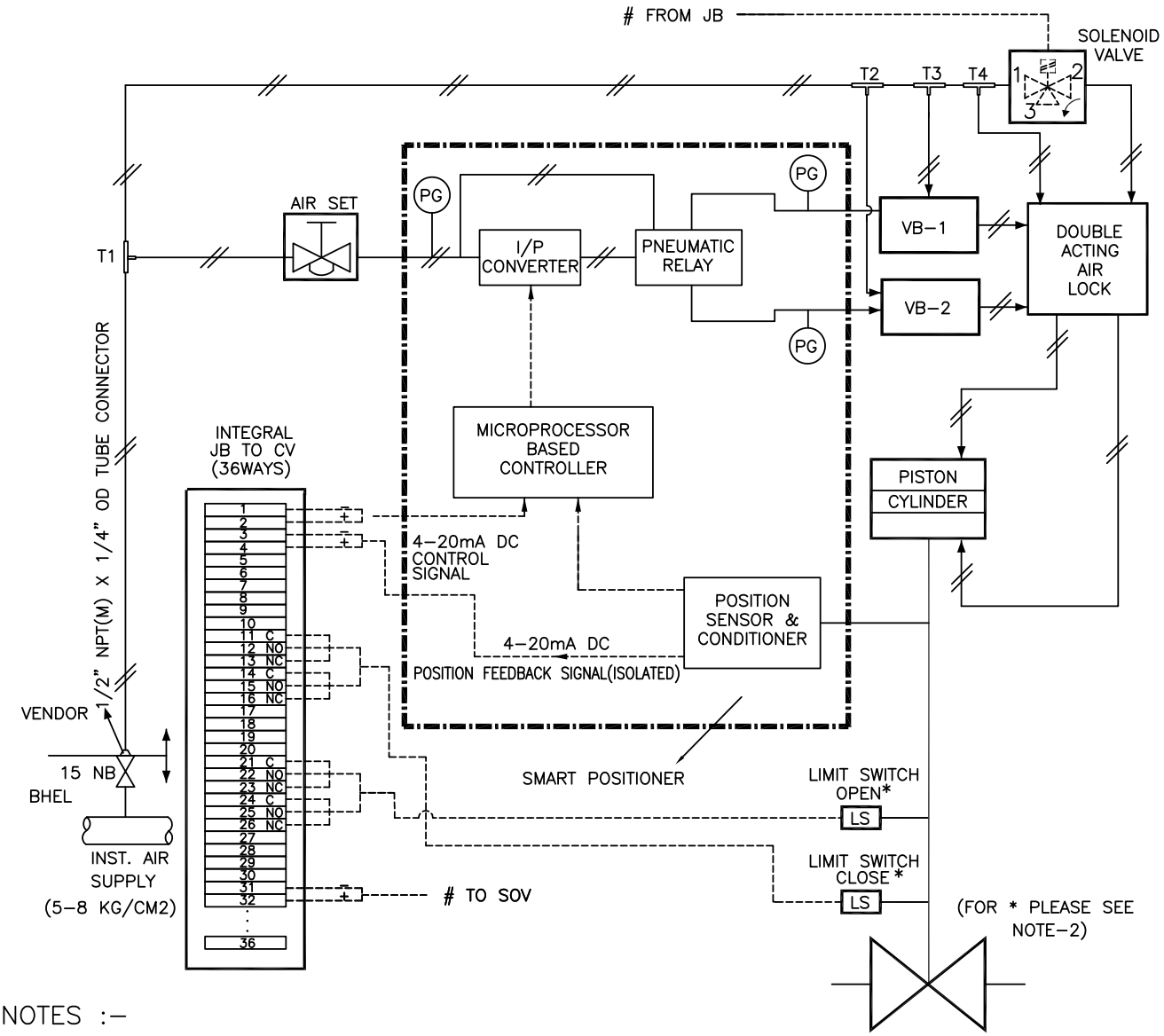

NOTES :–

1. POSITION OF EACH VALVE ON SUPPLY AIR FAILURE / ELECTRICAL SIGNAL FAILURE SHALL BE AS PER SPECIFICATION / DATA SHEET. AIR LOCK SHALL BE PROVIDED ACCORDINGLY.
2. SOLENOID VALVE & LIMIT SWITCHES WILL BE PROVIDED ONLY FOR CONTROL VALVES IF INDICATED IN RESPECTIVE DATA SHEETS.
3. SOLENOID VALVES PORTS CONDITION:
   PORT 1 AND 2 SHALL BE CONNECTED UNDER DE–ENERGISED CONDITION.
   PORT 2 AND 3 SHALL BE CONNECTED UNDER ENERGISED CONDITION.
4. PRESSURE GAUGES REQUIRED FOR AIR SUPPLY & OUTPUT(S).
5. MOUNTING ACCESSORIES AS REQUIRED.
6. POSITION FEEDBACK SIGNAL SHALL BE 2 WIRE 4–20mA ISOLATED SIGNAL.
7. JB TERMINALS SHALL BE CAGE CLAMP TYPE SUITABLE FOR 2.5 SQ. MM COPPER WIRE. EXTERNAL CONNECTION, OF PLUG IN TYPE OR THROUGH CABLE GLAND, SHALL BE AS PER DATA SHEET
8. ALL APPLICABLE ACCESSORIES SHALL BE PROVIDED AS INDICATED IN THE INDIVIDUAL CONTROL VALVE DATA SHEET / ACCESSORIES DATA SHEET.
9. 12 METERS 1/4" SS TUBING (AS PER ACCESSORIES DATA SHEET) & 1 SET OF FITTINGS TO BE SUPPLIED FOR EACH CONTROL VALVE FOR CONNECTION TO ISO VLV AT INST AIR HEADER ON ONE END AND TO AIR LOCK RELAY/AIR FILTER REGULATOR ON THE OTHER END. ALL THE BRASS / SS FITTINGS SHALL BE DOUBLE COMPRESSION TYPE.
10. VOLUME BOOSTER (ALONG WITH TEE–T2 AND RELATED TUBING & CONNECTORS) SHALL BE PROVIDED IF REQUIRED. AIR CONNECTION TO VOLUME BOOSTER FROM TEE–T2 & TEE–T3 SHALL BE PROVIDED.

File No. PEM-PG0MM(24)/1/2025-PS-PEM-PGI-1 (Computer No. 134626)
Generated from eOffice by Manoj Bhardwaj, ENGINEER(MB)-PG I-I-PS-PEM, ENGINEER, BHARAT HEAVY ELECTRICAL LTD on 07/01/2025 03:39 pm

CONTROL VALVE HOOK-UP DIAGRAM
(WITH SMART POSITIONER-PROFIBUS BASED)

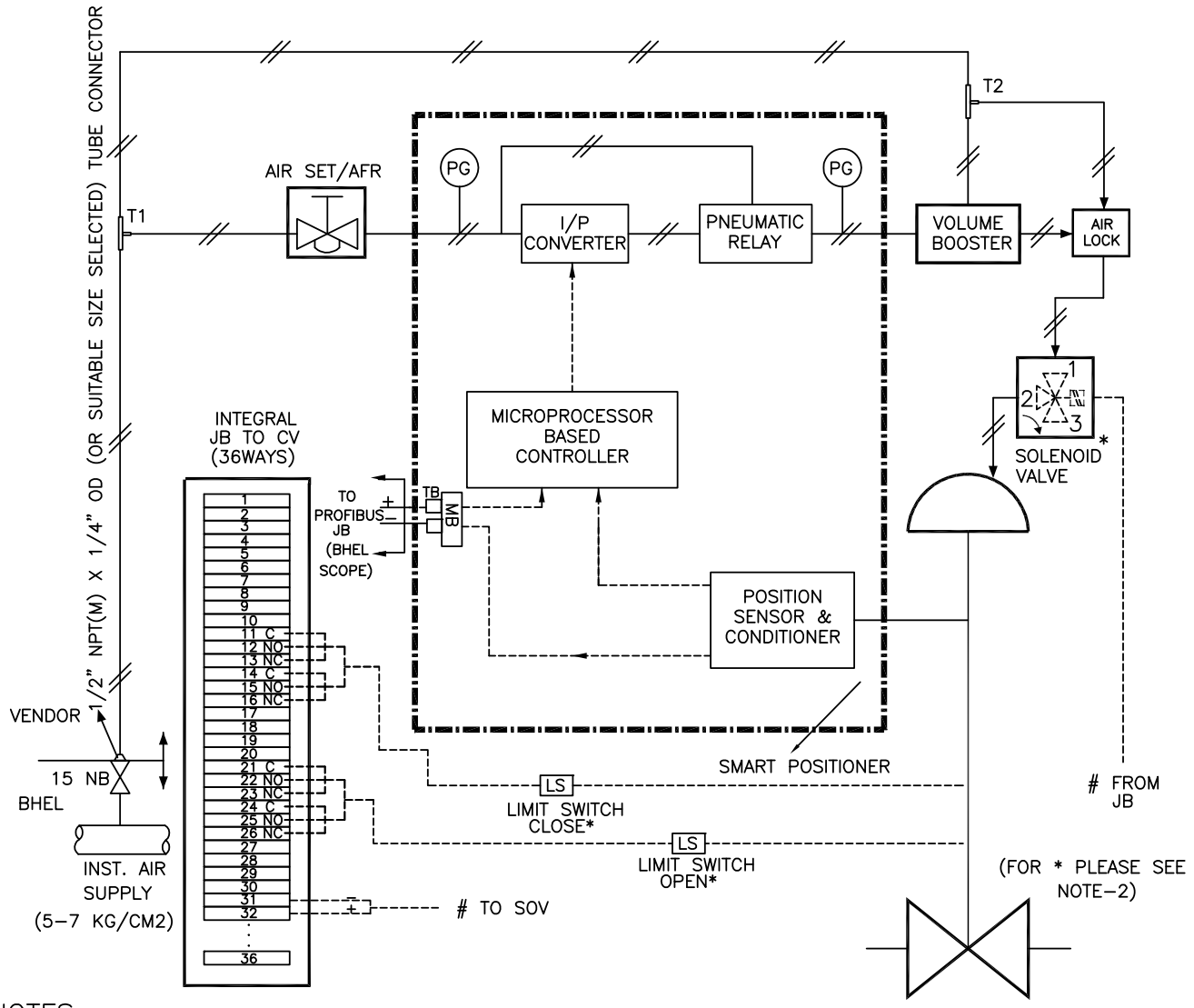

NOTES :–

1. POSITION OF EACH VALVE ON SUPPLY AIR FAILURE / ELECTRICAL SIGNAL FAILURE SHALL BE AS PER SPECIFICATION / DATA SHEET.
2. SOLENOID VALVE & LIMIT SWITCHES WILL BE PROVIDED ONLY FOR CONTROL VALVES IF INDICATED IN RESPECTIVE DATA SHEETS.
3. SOLENOID VALVES PORTS CONDITION:
   PORT 1 AND 2 SHALL BE CONNECTED UNDER DE–ENERGISED CONDITION.
   PORT 2 AND 3 SHALL BE CONNECTED UNDER ENERGISED CONDITION.
4. PRESSURE GAUGES REQUIRED FOR AIR SUPPLY AT INLET AND OUTLET OF SMART POSITIONERS.
5. MOUNTING ACCESSORIES AS REQUIRED.
6. PROFIBUS BASED SMART POSITIONER SHALL BE PROVIDED.
7. JB TERMINALS SHALL BE CAGE CLAMP TYPE SUITABLE FOR 2.5 SQ. MM COPPER WIRE. EXTERNAL CONNECTION, OF PLUG IN TYPE OR THROUGH CABLE GLAND, SHALL BE AS PER DATA SHEET.
8. ALL APPLICABLE ACCESSORIES SHALL BE PROVIDED AS INDICATED IN THE INDIVIDUAL CONTROL VALVE DATA SHEET / ACCESSORIES DATA SHEET.
9. TUBING AND FITTINGS TO BE PROVIDED AS FOLLOWS:–
   (a) TUBING: MATERIAL– SS316; SIZE– 1/4" OR SUITABLE SIZE SELECTED FOR EACH CONTROL VALVE ASSEMBLY; LENGTH– 12 METER PER CV.
   (b) FITTINGS: MATERIAL– SS,DOUBLE COMPRESSION TYPE; TUBE CONNECTOR– 1/2" NPT(M) X 1/4" OR SUITABLE SIZE SELECTED FOR EACH CONTROL VALVE ASSEMBLY; FITTINGS FOR CONNECTION TO AIR FILTER REGULATOR,AIR LOCK RELAY,IA HEADER ISOLATION VALVE AND EQUAL TEES.
10. VOLUME BOOSTER/DUMP VALVE AND ITS RELATED TUBING & CONNECTORS SHALL BE PROVIDED, IF REQUIRED TO ACHIEVE THE DESIRED TRAVEL TIME (<10Sec). AIR CONNECTION TO VOLUME BOOSTER/DUMP VALVE SHALL ALSO BE PROVIDED.
11. EXPANDER/REDUCER BETWEEN VALVE BODY AND PIPE SHALL BE SUPPLIED BY BHEL.
12. EXPANDER/REDUCER BETWEEN VALVE BODY AND DIFFUSER/CARTRIDGE/SILENCER(IF APPLICABLE) SHALL BE SUPPLIED BY BIDDER.

STANDARD CONTROL VALVE HOOK-UP DIAGRAM (DOUBLE ACTING PISTON ACTUATOR WITH SMART POSITIONER-PROFIBUS BASED)

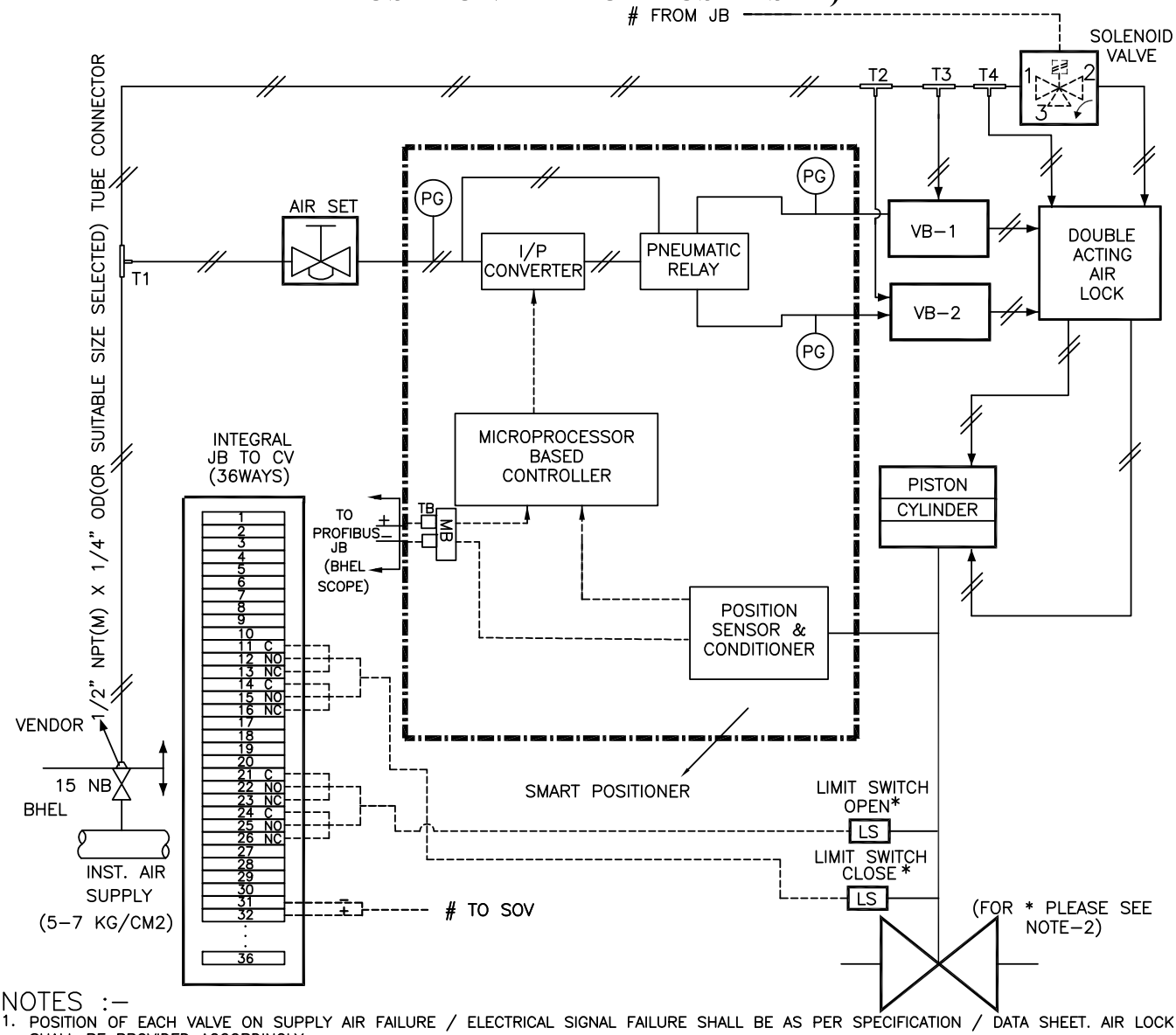

NOTES :-

1. POSITION OF EACH VALVE ON SUPPLY AIR FAILURE / ELECTRICAL SIGNAL FAILURE SHALL BE AS PER SPECIFICATION / DATA SHEET. AIR LOCK SHALL BE PROVIDED ACCORDINGLY.
2. SOLENOID VALVE & LIMIT SWITCHES WILL BE PROVIDED ONLY FOR CONTROL VALVES IF INDICATED IN RESPECTIVE DATA SHEETS.
3. SOLENOID VALVES PORTS CONDITION:
   PORT 1 AND 2 SHALL BE CONNECTED UNDER DE-ENERGISED CONDITION.
   PORT 2 AND 3 SHALL BE CONNECTED UNDER ENERGISED CONDITION.
4. PRESSURE GAUGES REQUIRED FOR AIR SUPPLY AT INLET & OUTLET OF SMART POSITIONER.
5. MOUNTING ACCESSORIES AS REQUIRED.
6. PROFIBUS BASED SMART POSITIONER SHALL BE PROVIDED.
7. JB TERMINALS SHALL BE CAGE CLAMP TYPE SUITABLE FOR 2.5 SQ. MM COPPER WIRE. EXTERNAL CONNECTION, OF PLUG IN TYPE OR THROUGH CABLE GLAND, SHALL BE AS PER DATA SHEET
8. ALL APPLICABLE ACCESSORIES SHALL BE PROVIDED AS INDICATED IN THE INDIVIDUAL CONTROL VALVE DATA SHEET / ACCESSORIES DATA SHEET.
9. TUBING AND FITTINGS TO BE PROVIDED AS FOLLOWS:-
   (a) TUBING: MATERIAL- SS316; SIZE- 1/4" OR SUITABLE SIZE SELECTED FOR EACH CONTROL VALVE ASSEMBLY; LENGTH- 12 METER PER CV.
   (b) FITTINGS: MATERIAL- SS,DOUBLE COMPRESSION TYPE; TUBE CONNECTOR- 1/2" NPT(M) X 1/4" OR SUITABLE SIZE SELECTED FOR EACH CONTROL VALVE ASSEMBLY; FITTINGS FOR CONNECTION TO AIR FILTER REGULATOR,AIR LOCK RELAY,IA HEADER ISOLATION VALVE AND EQUAL TEES.
10. VOLUME BOOSTER/DUMP VALVE AND ITS RELATED TUBING & CONNECTORS SHALL BE PROVIDED, IF REQUIRED TO ACHIEVE THE DESIRED TRAVEL TIME (<10Sec). AIR CONNECTION TO VOLUME BOOSTER/DUMP VALVE SHALL ALSO BE PROVIDED.
11. EXPANDER/REDUCER BETWEEN VALVE BODY AND PIPE SHALL BE SUPPLIED BY BHEL.
12. EXPANDER/REDUCER BETWEEN VALVE BODY AND DIFFUSER/CARTRIDGE/SILENCER(IF APPLICABLE) SHALL BE SUPPLIED BY BIDDER.

बी एच ई एल BHEL	TECHNICAL SPECIFICATION & DATA SHEET FOR CONTROL VALVE WITH ACCESSORIES (PNEUMATICALLY OPERATED)	Specification No.: PE-TS-508-145-H104 Rev. No. 00 Date :30.12.2024

SPECIFICATIONS FOR MICROPROCESSOR BASED SMART POSITIONER

1	Electrical	a) Input Demand Signal	4-20 mA **for HART compatible; Soft Signal for Profibus**
		b) Power Supply	Loop Powered from the output card of Control System.
		c) HART / Profibus Protocol	Compatibility for Remote Calibration & Diagnostics (Super-imposed HART signal on input Signal 4-20 mA and Profibus
		d. Valve position sensing	Position sensing: 4-20 mA output signal for HART and soft signal for Profibus compatible
2	Environment	a) Operating temp.	(-)30 To 80 Deg. C
		b) Humidity	0-95 %
		c) Protection class	IP-65 Minimum
3	Software for Configuration and Diagnostics	Software	Software shall meet the requirements for Configuration, Diagnostics, Calibration and Testing of the actuator.
		Diagnostic/Test features	Advanced diagnostic features like Stroke counter or Travel counter, Leakage in actuators, Valve Signature analysis, Step Response test, Valve friction /Jamming detection etc to be provided.
4	Test reports/ Certificates	Factory Valve Signature Tests Reports (Pr Vs Valve travel and Travel Vs I/P signal) are to be provided.	
		Test certificates as per Manufacture Standard/Relevant Standard are to be submitted.	
5	Configuration/ Calibration.	Remote & Local Calibration, Auto & Manual Calibration shall be possible.	
6	Operating Range	Full range/ Split range.	
7	Modes	Valve Action	Direct / Reverse Valve Action
		Flow Characterization	Possible to fit Valve Characteristic Curves- Linear , Equal percentage etc.
8	Fail Safe/Fail Freeze	Fail Safe/Fail Freeze feature is to be provided. (In case the fail freeze feature is not intrinsic to the positioner, Bidder shall achieve the same externally through solenoid valve connected in the pneumatic circuit).	
9	Pneumatic	Air capacity	Sufficient to handle the valves & actuators selected/ Boosters to be supplied, if required.
		Air pressure	To suit the air supply pressure/quality available.
		Process connection	¼" NPT
10	Performance	Characteristic deviation	<=0.5 % of span.
		Ambient temp effect	<=0.01 %/ deg C or better.
11	EMC & CE Compliance	Required to International Standard like EN/IEC.	EN50081-2 & EN50082 or equivalent.
12	Accessories	In-built Operator Panel	Display with push buttons for configuration and display on the positioner itself (Password protected/Hardware lock).
		Press Gauge Block	For supply & output pressures, Air Filter Regulator and other accessories shall be provided on as required basis for making system complete.
		Electrical Cable Entry	1/2'"NPT, side or bottom entry to avoid water **ingress**
		Valves Mounting Assembly	**For-Single acting/Double acting actuators on as required basis**

बी एच ई एल BHEL	TECHNICAL SPECIFICATION & DATA SHEET FOR CONTROL VALVE WITH ACCESSORIES (PNEUMATICALLY OPERATED)	Specification No.: PE-TS-508-145-H104 Rev. No. 00 Date :30.12.24

CONTROL VALVES COMPLETE WITH POSITIONER AND ALL ACCESSORIES MOUNTED, TUBED AND TERMINATED ON JB

[A]	MAIN SUPPLY			
SR. NO.	**TAG NO**	**DESCRIPTION**	**QTY/UNIT**	**TOTAL QTY FOR 2 UNITS**
1	ASV-8	D/A PEGGING FROM AUX. STEAM HEADER	1	2
2	CRHV-6	D/A PEGGING FROM CRH LINE	1	2
3	CDV-25	LOW LOAD CONDENSATE CONTROL	1	2
4	CDV-39	GSC/CEP MIN. FLOW RECIRCULATION	1	2
5	CDV-65	CEP-A MIN. FLOW RECIRCULATION	1	2
6	CDV-67	CEP-B MIN. FLOW RECIRCULATION	1	2
7	CDV-69	CEP-C MIN. FLOW RECIRCULATION	1	2
8	CDV-43	EXCESS DUMP CONTROL	1	2
9	CDV-72	CONDENSATE FOR VALVE GLAND SEALING & F/T	1	2
10	CDV-84	CONDENSATE SPRAY FOR F/T	1	2
11	CDV-94	CONDENSATE SPRAY FOR UNIT F/T	1	2
12	DRV-53	HPH-9A NORMAL DRAIN TO HPH-8A	1	2
13	DRV-59	HPH-9B NORMAL DRAIN TO HPH-8B	1	2
14	DRV-56	HPH-9A ALT DRAIN TO F/T	1	2
15	DRV-62	HPH-9B ALT DRAIN TO F/T	1	2
16	DRV-2	HPH-8A NORMAL DRAIN TO HPH-7A	1	2
17	DRV-8	HPH-8B NORMAL DRAIN TO HPH-7B	1	2
18	DRV-5	HPH-8A ALT DRAIN TO F/T	1	2
19	DRV-11	HPH-8B ALT DRAIN TO F/T	1	2
20	DRV-15	HPH-7A NORMAL DRAIN TO DEAERATOR	1	2
21	DRV-22	HPH-7B NORMAL DRAIN TO DEAERATOR	1	2
22	DRV-18	HPH-7A ALT DRAIN TO F/T	1	2
23	DRV-25	HPH-7B ALT DRAIN TO F/T	1	2
24	DRV-82	LPH-5 NORMAL DRAIN TO LPH-4	1	2
25	DRV-85	LPH-5 ALT. DRAIN TO F/T	1	2
26	DRV-65	LPH-4 NORMAL DRAIN TO LPH-3	1	2
27	DRV-68	LPH-4 ALT. DRAIN TO F/T	1	2
28	DRV-77	DRIP PUMP DISCHARGE CONTROL	1	2
29	DRV-31	LPH-3 ALT. DRAIN TO F/T	1	2
30	DRV-48	DEAERATOR OVERFLOW TO F/T	1	2
31	DMV-43	NORMAL DM MU TO HOTWELL	1	2
32	DMV-78	EMERGENCY DM MU TO HOTWELL	1	2
33	ASV-16	DRAIN OF AUX STEAM FROM EXISTING UNIT HEADER TO UNIT F/T	1	1
34	DMCWSG12	DMCW SYSTEM FOR SG AUX'S	1	2
35	DMCW18	DMCW SYSTEM FOR TG AUX'S	1	2
[B]	**1/4 " SS TUBING (12 METER FOR EACH TAG)**			828 MTR
[C]	**SS FITTINGS- FOR EACH TAG**		1 LOT	2 LOTS
1	SS FITTINGS for connection to Air Filter Regulator- FOR EACH TAG		1 LOT	2 LOTS
2	SS FITTINGS for connection to Air Lock Relay- FOR EACH TAG		1 LOT	2 LOTS
3	SS FITTINGS for connection to IA Header Isolation Valve - FOR EACH TAG		1 LOT	2 LOTS
4	SS EQUAL TEE - FOR EACH TAG		1 LOT	2 LOTS
5	SS 1/2 " NPT(M) X 1/4 " OD TUBE CONNECTOR- FOR EACH TAG		1 LOT	2 LOTS
[D]	**CV TEST CHARGES FOR EACH CONTROL VALVE**		1 LOT	1 LOT
[E]	**VALVE DIAGNOSTIC AND CONFIGURATION SOFTWARE (FOR ALL TAGS)**		1 LOT	2 LOTS

File No. PEM-PG0MM(24)/1/2025-PS-PEM-PGI-1 (Computer No. 134626)
Generated from eOffice by Manoj Bhardwaj, ENGINEER(MB)-PG I-1-PS-PEM, ENGINEER, BHARAT HEAVY ELECTRICAL LTD on 07/01/2025 03:39 pm

	TECHNICAL SPECIFICATION & DATA SHEET FOR CONTROL VALVE WITH ACCESSORIES (PNEUMATICALLY OPERATED)	Specification No.: PE-TS-508-145-H104 Rev. No. 00 Date :30.12.24

LIST OF COMMISSIONING SPARES

S NO	ITEM DESCRIPTION	QUANTITY FOR STATION
1	Gaskets	One (1) set with each control valve tag
2	Gland Packing	One (1) set with each control valve tag

LIST OF MANDATORY SPARES

Sr. No.	Description	Qty FOR STATION
[A]	**Mandatory Spares for SG DMCW valve**	
1	Pneumatic and electro-hydraulic actuator assembly	1 No. of each type, model and rating
2	Diaphragms, O' rings, seals etc.	5 Nos. of all types make etc.
3	Solenoid valves (if applicable)	1 Nos. of each type
4	Smart positioners (complete unit) & accessories (link assembly)	2 Nos. of each type, model and rating
5	Pneumatic air-filter/Regulator	2 Nos. of each type, make rating etc.
6	Air lock relays	1 nos. of each type,model and rating
7	Valve trim (including cage, plug, stem, seat rings, guide bushings, etc.)	1 set for each each type, class, size of control valve.
8	Gland Packing	5 sets
9	Gaskets	5 sets
[B]	**Mandatory Spares for CEP min recirculation valve**	
1	CEP recirculation valve trim which includes spindle with cone, seat ring, guide bush, cage	1 Set
2	CEP recirculation valve soft parts i.e. gland packing, seals, O-rings, gaskets etc.	3 Set
[C]	**Mandatory Spares for Process Connection Piping**	
1	Fittings	
(a)	SS FITTINGS for connection to Air Filter Regulator- FOR EACH TAG	100 nos. of each type
(b)	SS FITTINGS for connection to Air Lock Relay- FOR EACH TAG	100 nos. of each type
(c)	SS FITTINGS for connection to IA Header Isolation Valve - FOR EACH TAG	100 nos. of each type
(d)	SS EQUAL TEE - FOR EACH TAG	100 nos. of each type
2	Pneumatic air-filter/Regulator	20 Nos. of each type and model
3	Valves of all types(like Equalising Valves, Exhaust Valves, etc.)	20 Nos. of each type and model

NOTES

1. Wherever the quantities have been indicated for each type, size, thickness, material, radius, range etc., these shall cover all the items supplied and installed and the breakup for these shall be furnished in the bid. In case spares indicated in the list are not applicable to the particular design offered by the bidder, the bidder should offer spares applicable to offered design with quantities generally in line with the approach followed in the above list.

File No. PEM-PG0MM(24)/1/2025-PS-PEM-PGI-1 (Computer No. 134626)
Generated from eOffice by Manoj Bhardwaj, ENGINEER(MB)-PG I-1-PS-PEM, ENGINEER, BHARAT HEAVY ELECTRICAL LTD on 07/01/2025 03:39 pm

बी एच ई एल BHEL	**TECHNICAL SPECIFICATION & DATA SHEET FOR CONTROL VALVE WITH ACCESSORIES (PNEUMATICALLY OPERATED)**	**Specification No.: PE-TS-508-145-H104**
		Rev. No. 00
		Date :30.12.24

PAINTING SPECIFICATION

Package	Condition	Surface Preparation	Primer Coat	No. of Coats	DFT (in Microns)	Intermediate Coat (in Microns)	No. of Coats	DFT (in Microns)	Final Coat	No. of Coats	DFT (in Microns)	Total DFT (Min)
Control Valve	F91,WC9,WCB valves (above 60 deg C)	Sa 2.5	Heat Resistant Aluminium Paint IS 13183, Grade I/II	1	20	NA	NA	NA	Heat Resistant Aluminium Paint IS 13183, Grade I/II	1	20	40
	Carbon Steel Actuators and F91,WC9,WCB valves (upto 60 deg C #)	Sa 2.5	Epoxy Based Zinc Primer (92% Zinc in dry film (min), % VS = 35 (min))	1	30	Epoxy based MIO pigmented intermediate coat	1	75	Epoxy based Finish paint to IS14209 / Aliphatic acrylic Polyurethane paint to IS 13213	2	30	165

NOTES:

Stainless Steel, Non- Ferrous and Galvanised item/portion will not be painted

- For Cast/forged valves upto & including design temperature 60Deg.C, Aluminium painting as per IS-13183 Gr-3 or better with total DFT 40Micron is also acceptable

DFT shown is minimum. Bidder may offer higher paint thickness

बीएचईएल BHEL	TECHNICAL SPECIFICATION & DATA SHEET FOR CONTROL VALVE WITH ACCESSORIES (PNEUMATICALLY OPERATED)	**Specification No.: PE-TS-508-145-H104**
		Rev. No. 00
		Date :30.12.24

PACKING SPECIFICATION

The item with all accessories needs to be suitably packed to avoid physical damage and corrosion during transit and storage. The packing shall be suitable for different handing operation and for the adverse condition during transportation and during indoor/outdoor storage of material. The following are the minimum requirements to be complied with for packing.

Type of Packing: Item shall be fully covered with multi layered cross laminated colourless polyethylene sheet of at least 100 GSM and shall be packed inside wooden box. Sufficient amount of silica gel also to be placed inside polyethylene sheet. Item shall be firmly fixed to the bottom of the packing box to restrict movement. The electronic items like positioner and other delicate items like pressure gauges etc. shall be individually wrapped in polyethylene air bubble film or black foam. End openings are to be protected with plastic caps. Corrosion inhibitors are to be applied on all unpainted carbon steel surfaces.

Quality of wood: Wood used for packing box shall be Pinewood, Rubber wood, Mango wood, Fir wood, Silver Oak wood or other as per availability with moisture content not exceeding 30%.

Cushioning material and moisture absorber: Suitable cushioning shall be provided by rubberized coir/ thermocol / expanded soft polyethylene foam. Adequate quantity of silica gel packed in thin muslin cloth cotton bags should be suitably placed inside the packing box.

Packing slip & holder: Packing slip kept in polyethylene bag shall be placed inside the wooden box at appropriate place. One copy of packing slip wrapped in polyethylene bag covered in galvanized iron tin sheet/ aluminium packing slip holder shall be fixed on the external surface the packing box.

	TECHNICAL SPECIFICATION & DATA SHEET FOR CONTROL VALVE WITH ACCESSORIES (PNEUMATICALLY OPERATED)	Specification No.: PE-TS-508-145-H104
		Rev. No. 00
		Date :30.12.24

DOCUMENTATION REQUIREMENT

DRAWINGS & DOCUMENTS TO BE SUBMITTED ALONG WITH THE BID

1	BIDDER TO SUBMIT THE DOCUMENTS AS PER CLAUSE MENTIONED IN NIT.

DRAWINGS & DOCUMENTS TO BE SUBMITTED AFTER AWARD OF CONTRACT

Sl. No.	DOCUMENT TITLE
1	DATA SHEET, CALCULATION, BOQ/BOM, GA DRAWING, EDGE Preparation details & HOOK UP /INSTALLATION DRAWING for Control Valves
2	QAP for Control Valves
3	CALIBRATION REPORTS

DRAWINGS & DOCUMENTS TO BE SUBMITTED AS FINAL/AS-BUILT DOCUMENT

Sl. No.	DOCUMENT TITLE
1	DATA SHEET, CALCULATION, BOQ/BOM, GA DRAWING, EDGE Preparation details & HOOK UP /INSTALLATION DRAWING for Control Valves
2	APPROVED QUALITY PLAN
3	CALIBRATION REPORTS
4	CATALOGUE/TECHNICAL LITERATURE/O&M MANUAL
5	ALL TEST CERTIFICATES

	TECHNICAL SPECIFICATION & DATA SHEET FOR CONTROL VALVE WITH ACCESSORIES (PNEUMATICALLY OPERATED)	Specification No.: PE-TS-508-145-H104						
		Rev. No. 00						
		Date :30.12.2024						
DATA SHEET FOR CONTROL VALVE TO BE FILLED BY BIDDER FOR EACH TAG AT TENDER STAGE								
A. GENERAL INFORMATION								
1	TAG NUMBER / SERVICE							
2	LOCATION / DUTY							
B. DESIGN CODES & STANDARDS								
3	CODE / STANDARD	REFER GENERAL NOTES						
C. TECHNICAL PARAMETERS / DESIGN FEATURES								
4	PIPE SIZE (OD X THK) mm INLET / OUTLET							
5	PIPE MATERIAL INLET / OUTLET							
6	VALVE BODY TYPE / MATERIAL / SIZE CRITERIA							
7	GUIDING / NO. OF PORTS / TRIM FORM							
8	CAGE TYPE / CAGE MATERIAL / GUIDE BUSH							
9	PLUG TYPE / PLUG MATERIAL / STEM MATERIAL							
10	YOKE MATERIAL / SEAT MATERIAL & TYPE							
11	PACKING MATERIAL / NOS / TYPE							
12	END CONNECTION / ANSI RATING / BONNET TYPE							
13	FLOW ACTION / VALVE OUTLET VELOCITY							
14	LEAKAGE CLASS / NOISE LEVEL (dBA)							
15	VACUUM SERVICE / ANTI CAVITATION TRIM							
16	ACTUATOR TYPE / TYPE OF PNEUMATIC ACT / SIZING CRITERIA							
17	TRAVEL TIME FOR OPEN TO CLOSE, CLOSE TO OPEN							
18	VALVE POSN. ON: SIGNAL AIR FAILURE / SUPPLY AIR FAILURE							
19	EXPANDER / REDUCER BET CV AND PROCESS PIPE							
20	EXPANDER / REDUCER BET CV AND CARTRIDGE(IF CATRIDGE IS APPLICABLE)							
21	SMART POSITIONER / POSITION LIMIT SWITCH							
22	POSITION TRANSMITTER / E/P CONVERTER							
23	AIR FILTER REGULATOR / AIR LOCK RELAY							
24	SOLENOID VALVE / JUNCTION BOX							
25	HAND WHEEL (SIDE MOUNTED) / LOCAL POSITIONER INDICATOR							
26	ELECTRO PNEUMATIC POSITIONER							
27	SERVICE CONDITIONS	FLOW (T/HR)	INLET PR KG/CM2(A)	OUTLET PR. KG/CM2(A)	TEMP DEG. C	CALCULATED CV	% VLV LIFT	VALVE O/L VELOCITY
28								
29								
30								
31								
31a								
31b								
31c								
32	BODY DESIGN PRESSURE (KG/CM2 (g)) : TEMP (DEG C)							
33	IBR FORM-IIIC							
34	VALVE TYPE							
D. GUARENTEED PERFORMANCE REQUIREMENTS								
35	LINEARITY / HYSTERISIS / SENSITIVITY / OVERALL ACCURACY	+/- 1%	+/- 1%	+/- 0.5%	+/- 2%			
E. PACKING								
36	AS PER ENCLOSED SPECIFICATION							
F. PAINTING								
37	AS PER ENCLOSED SPECIFICATION							

File No. PEM-PG0MM(24)/1/2025-PS-PEM-PGI-1 (Computer No. 134626)
Generated from eOffice by Manoj Bhardwaj, ENGINEER(MB)-PG I-1-PS-PEM, ENGINEER, BHARAT HEAVY ELECTRICAL LTD on 07/01/2025 03:39 pm

बी एच ई एल BHEL	TECHNICAL SPECIFICATION & DATA SHEET FOR CONTROL VALVE WITH ACCESSORIES (PNEUMATICALLY OPERATED)	Specification No.: PE-TS-508-145-H104 Rev. No. 00 Date :30.12.24

COMPLIANCE CERTIFICATE

1	It is hereby confirmed that the technical specification (sheet 1 to 57) has been read and understood. We confirm compliance to the tender specification including any prebid clarification and amendments issued prior to techno-commercial bid opening without any deviation.
2	It is hereby declared that any technical submittal which was not specifically asked by BHEL in NIT shall not to be considered as part of bid and shall not be evaluated by BHEL.

Signature of authorised Representative :

Name and Designation :

Name & Address of the Bidder :

Date :

SINGRAULI PROJECT

TECHNICAL PQR AND TECHNICAL SPECS

PRE-QUALIFICATION REQUIREMENT (TECHNICAL)

	CONTROL VALVES WITH ACCESSORIES	PE-PQ-512-145-H001	
		DATE	26/12/2024
	2 X 800 MW NTPC SINGRAULI STPP STAGE-III	REV NO	00

1.0	Bidder should be Original equipment manufacturer (OEM) for CONTROL VALVES. In case bidder is not the OEM, evaluation shall be done as following :- (i) If bidder happens to be an Indian subsidiary of foreign OEM, then credentials of foreign OEM can be considered for meeting the PQR. (ii) If bidder happens to be authorised channel partner or has a valid collaboration agreement/licensing agreement with some other company or being a Joint Venture company, then the credentials of collaborator/licensing company/Principal company/JV partner can also be considered for meeting PQR as per the scope of work. The scope matrix shall include their respective roles including design vetting, manufacturing of critical component and warranty/ guarantee. If bidder qualifies on the basis of credentials of their principal/ JV partner/ Collaborator etc., then the principal/ JV partner/ Collaborator shall be responsible for overall design vetting and warranty/ guarantee of the package.
2.0	The Product being offered by the bidder should be in use successfully in power plant or any other industrial application for at least 1 (One) year. Bidder to submit either of following supporting documents for the product (control valve) with the following parameters:- (i) Minimum valve size = 4” (ii) Minimum pressure rating = ANSI #300 Copy of minimum 1 (One) Performance Certificate from end user / Customer certifying that product is running successfully for 1 (One) year from date of commissioning. The certificate should clearly indicate date of commissioning, date of issue of certificate and name/designation of the certificate issuer. Copy of purchase order & technical parameters to be attached along with the performance certificate. The date of satisfactory performance feedback certificate should not be later than the date of subject enquiry/NIT. OR Copy of repeat orders from minimum 2 (Two) different purchasers. Order received by supplier from same purchaser with a gap of minimum 2 (Two) years shall be considered as repeat order. Copy of technical parameters for each order to be attached. The date of repeat order should not be later than the date of subject enquiry/NIT.
3.0	Bidder to furnish experience list of last 5 years indicating customer name, purchase order reference, item supplied & year of supply to establish the continuity of business.
4.0	Bidder to submit all supporting documents in English. If documents submitted by bidder are in language other than English, a self-attested English translated document should also be submitted.
5.0	Notwithstanding anything stated above, BHEL reserves the right to assess the capabilities and capacity of the bidders/collaborators to perform the contract, should the circumstances warrant such assessment in the overall interest of BHEL.
6.0	Consideration of offer shall be subject to customer’s approval of bidders.
7.0	After satisfactory fulfilment of all the above criteria/ requirement, offer shall be considered for further evaluation as per NIT and all the other terms of the tender.

PREPARED BY	REVIEWED BY	APPROVED BY
SANDHYA BASWAL (MGR)	CHETAN MALIK (SR. MGR)	SURESH CHAND SHARMA (SR. DGM)

File No. PEM-PG0MM(24)/1/2025-PS-PEM(PG-I) (Computer No. 134626)
Generated from eOffice by Manoj Bhardwaj, ENGINEER(MB)-PG I-I-PS-PEM, ENGINEER, BHARAT HEAVY ELECTRICAL LTD on 07/01/2025 03:32 pm

	TECHNICAL SPECIFICATION & DATA SHEET FOR CONTROL VALVE WITH ACCESSORIES (PNEUMATICALLY OPERATED)	Specification No.: PE-TS-512-145-H104
		Rev. No. 00
		Date : 30.12.24

TECHNICAL SPECIFICATION

FOR
CONTROL VALVES
WITH ACCESSORIES (OTHER THAN FDV-14)

2 X 800 MW SINGRAULI THERMAL POWER PLANT
(STAGE-III)

SPECIFICATION No. PE-TS-512-145-H104

BHARAT HEAVY ELECTRICALS LIMITED
POWER SECTOR
PROJECT ENGINEERING MANAGEMENT DIVISION
NOIDA, INDIA

File No. PEM-PGOMM(24)/1/2025-PS-PEM-PGI-1 (Computer No. 134626)
Generated from eOffice by Manoj Bhardwaj, ENGINEER(MB)-PG I-1-PS-PEM, ENGINEER, BHARAT HEAVY ELECTRICAL LTD on 07/01/2025 03:33 pm

बी एच ई एल BHEL	TECHNICAL SPECIFICATION & DATA SHEET FOR CONTROL VALVE WITH ACCESSORIES (PNEUMATICALLY OPERATED)	Specification No.: PE-TS-512-145-H104
		Rev. No. 00
		Date : 30.12.24

INDEX

Sl No.	DESCRIPTION	PAGE NO.
1	SCOPE	3
2	GENERAL TECHNICAL REQUIREMENTS	4
3	E-LEARNING MODULE	6
4	DATA SHEET	9
5	DATA SHEET FOR CONTROL VALVE ACCESSORIES	37
6	QUALITY PLAN	38
7	CONTROL VALVE HOOK UP DIAGRAM	46
8	SPECIFICATION FOR SMART POSITIONER	51
9	BILL OF QUANTITY (BOQ)	52
10	BILL OF QUANTITY (BOQ)-MANDATORY SPARES	53
11	PAINTING & PACKING	54
12	DOCUMENT REQUIRED	56
13	DATASHEET TO BE FILLED BY BIDDER	57
14	COMPLIANCE CERTIFICATE	58

	TECHNICAL SPECIFICATION & DATA SHEET FOR CONTROL VALVE WITH ACCESSORIES (PNEUMATICALLY OPERATED)	Specification No.: PE-TS-512-145-H104
		Rev. No. 00
		Date : 30.12.24

SCOPE

CONTROL VALVES COMPLETE WITH POSITIONER AND ALL ACCESSORIES MOUNTED, TUBED AND TERMINATED ON JB:		
1	SUPPLY INCLUDING DESIGN, ENGINEERING & MANUFACTURING	YES
2	INSPECTION & TESTING INCLUDING CV TEST	YES
3	ERECTION & COMMISSIONING	NO
4	SUPERVISION OF ERECTION & COMMISSIONING	NO
5	COMMISSIONING SPARES	YES
6	MANDATORY SPARES	YES
7	O & M SPARES	NO
8	PACKING	YES
9	PAINTING	YES
10	TRANSPORTATION & DELIVERY TO SITE	YES

	TECHNICAL SPECIFICATION & DATA SHEET FOR CONTROL VALVE WITH ACCESSORIES (PNEUMATICALLY OPERATED)	Specification No.: PE-TS-999-145-H104 Rev. No. 00 Date : 30.12.24

	GENERAL TECHNICAL REQUIREMENT
1	It is not the intent to specify herein all the details of design and manufacturing. The equipment shall conform in all respects to high standards of design, engineering and workmanship and shall be capable of performing the required duties in a manner acceptable to purchaser who will interpret the meaning of drawings and specifications and shall be entitled to reject any work or material which in his judgement is not in full accordance herewith.
2	Bidder shall also ensure that the offered equipment shall comply with all applicable statutory and regulatory requirements.
3	In the event of any conflict between the requirements of two clauses of this specification, documents or requirements of different codes and standards specified, the more stringent requirement as per the interpretation of the owner shall apply.
4	Drawing/document submission shall be through web based Document Management System(DMS) of BHEL. Bidder would be provided access to the DMS for drawing/document submission. Bidder to ensure internet connectivity of min speed of 2Mbps at their end.
5	Drawings/ documents submitted by vendor at any stage shall be complete in all respects. Any incomplete drawing submitted shall be treated as non-submission with delays attributable to vendor. For any clarification/ discussion required to complete the drawings, the bidder shall depute his personnel to BHEL / Customer's Office as per the requirement for across the table submission/ finalization of drawings.
6	Trim and body material has been specified in the respective data sheet. However, any substitute material if recommended by the manufacturer shall be either equivalent or superior to those specified and can be provided if found technically acceptable without any commercial and delivery impact.
7	In case bidder is not able to offer the required characteristics due to design considerations, modified Trim (Mod.EQ percentage or Mod. linear) can be offered subject to BHEL acceptance.
8	E- Learning Module shall be supplied by bidder as per Details provided in specification.
9	Bidder shall submit Quality Plan in the event of order based on the Quality Plan enclosed herein. QP will be subject to BHEL / CUSTOMER approval & customer hold points for inspection / testing shall be marked in the QP at the contract stage.
10	In case, the bidder is sourcing the item/any component from outside India, the third party inspection shall be arranged by bidder at their cost and shall be deemed to be considered by the bidder in their offer without any delivery impact.
11	Any change in valve size, percentage opening etc., if desired by BHEL / customer during approval of the documents after award of contract, within the gamut of tender specification, same shall be carried out by bidder without any commercial and delivery impact.
12	Sub vendor list is attached. Any additional sub - vendors proposed by bidder during contract stage shall be subject to BHEL/ Customer approval in the
13	Mandatory Spares :
13.1	Wherever the quantities have been indicated for each type, size, thickness, material, radius, range etc., these shall cover all the items supplied and installed and the breakup for these shall be furnished in the bid. In case spares indicated in the list are not applicable to the particular design offered by the bidder, the bidder should offer spares applicable to offered design with quantities generally in line with the approach followed in the mandatory spare list
13.2	Any item which is quoted as "not applicable" in the spare list and is found to be "applicable" at a later date shall be supplied by the Bidder without any commercial implications.
13.3	Each spare shall be clearly marked and labeled on the outside of the packing with its description. When more than one spare part is packed in single case, a general description of the contents shall be shown on the outside of such case and a detailed list enclosed. All cases, containers and other packages must be suitably marked and numbered for the purpose of identification.
14	Nameplates shall be manufactured from stainless steel or aluminium with a matte or satin finish, and engraved with black lettering of a minimum 6 mm height or as per equipment standard whichever is higher.
15	Document approval by BHEL / Customer shall not absolve the supplier of their contractual obligations of completing the work as per specification requirement without any commercial and delivery impact.
16	Equipment must be safe, reliable and easy to maintain at all operating conditions.

File No. PEM-PG0MM(24)/1/2025-PS-PEM-PGI-1 (Computer No. 134626)
Generated from eOffice by Manoj Bhardwaj, ENGINEER(MB)-PG I-1-PS-PEM, ENGINEER, BHARAT HEAVY ELECTRICAL LTD on 07/01/2025 03:33 pm

	TECHNICAL SPECIFICATION & DATA SHEET FOR CONTROL VALVE WITH ACCESSORIES (PNEUMATICALLY OPERATED)	Specification No.: PE-TS-999-145-H104 Rev. No. 00 Date : 30.12.24
	GENERAL TECHNICAL REQUIREMENT	
17	The control valves shall be designed as per the latest version of the following codes/Standards :-	
17.1	Control Valve Sizing :	ISA S-75
17.2	Pressure / Temperature Rating :	ANSI-B16.34
17.3	Seat Leakage :	ANSI/FCI 70.2
17.4	Noise :	IEC 60534-4
17.5	End Connection: Butt Weld	ANSI B16.25
17.6	End Connection: Socket Weld	ANSI B16.11
17.7	End Connection: Flanged End	ANSI B16.5
17.8	End To End Tolerance :	ANSI B16.10
18	The Control valve, Actuator and the accessories opertaing conditions	Continuous operation under an ambient temperature : 0-60°C, Relative Humidity : 0-95%.
19	Valve Selection Criteria :	
19.1	Valve Opening at maximum flow conditions	not greater than 80% of total Valve stem travel
19.2	Valve Opening at minimum flow conditions	not less than 10% of total Valve stem travel
19.3	Stem travel from minimum flow to maximum flow	not less than 50% of total Valve stem travel
19.4	Flow capability	120% of maximum flow
20	Trim requirement for cavitation / flashing service	Anticavitation Trim/ Hardened Trim
21.1	Bonnet joints type	Flanged and Bolted
21.2	Type of Bonnet when fliud temperature is greater than 280 deg. C	Extended Bonnets
22.1	Plug Type	Plug shall be of one-piece construction cast, forged or machined from solid bar stock, BALANCED type
22.2	Plug connection with stem	Plug shall be screwed and pinned to valve stems or shall be integral with the valve stems.
23	Control Valve Guide type	High lift cage guided plugs
24	Trim type	Quick-change
25	Noise abatement method	The noise abatement shall be achieved by valve body and trim design and not by use of silencers except for few cases as per contractor's standard and proven practice subject to employer's approval.
26.1	Scope of Expander/Reducer between valve body and pipe	BHEL
26.2	Scope of Expander/Reducer between valve body diffuser, cartridge, silencer	Bidder
27	Flow action for vacuum application	Above the Seat
28	Painting Details	Refer Specification
29	Packing Details	Refer Specification
30	Valve actuators and stems shall be adequate to handle the unbalanced forces occurring under the specified flow conditions or the maximum differential pressure specified. An adequate allowance for stem force, at least 0.15 Kg/sq.cm. per linear millimeter of seating surface, shall be provided in the selection of the actuator.	

File No. PEM-PG0MM(24)/1/2025-PS-PEM-PGI-1 (Computer No. 134626)

Generated from eOffice by Manoj Bhardwaj, ENGINEER(MB)-PG I-1-PS-PEM, ENGINEER, BHARAT HEAVY ELECTRICAL LTD on 07/01/2025 03:33 pm

CLAUSE NO.	GENERAL TECHNICAL REQUIREMENTS
	e- Learning package: e- Learning package shall be supplied for CONTROL VALVES
8.03.05.03	These packages shall be installed on the Learning Management Server (LMS) of Power Management Institute (PMI), NTPC located at Noida. The Project Manager / Engineer- In-Charge (EIC) for the e-learning modules shall be from PMI. **1.** The objective of the e-Learning package consisting of courses for erection, commissioning, operation and maintenance of equipment / system as specified above is to facilitate the employees to have first hand information / requirement with respect to above activities for the supplied equipment / system . **2.** The bidder shall submit e-learning courses each for erection, commissioning, operation and maintenance of each of the equipment / system supplied as above. **a.** The erection course(s) should include instructions on pre-checks, prerequisites, erection strategy, erection procedure etc. **b.** The commissioning course(s) should include instructions on pre-commissioning, commissioning, initial operation etc. **c.** The operation course(s) should include instructions on the permissive, interlocks, physical check-ups, start-up, shutdown and protections etc. **d.** The maintenance course(s) should include instructions on predictive, preventive, breakdown and overhauling. Depth of coverage of above courses shall be as specified for **"Instruction Manuals"** in above clauses. A literature on caution / safety while handling equipment / system for the above modules shall follow the description of the said equipment /system.

CLAUSE NO.	GENERAL TECHNICAL REQUIREMENTS
	3. The e-Learning packages on equipment / system shall be installed by the vendor and shall be successfully test run in the presence of Project Manager / EIC or representative before acceptance by NTPC. The vendor will also give the master copy in form of Flash Drive/CD/DVD. The respective module for erection & commissioning shall be delivered and successfully test run at least three months before the scheduled start of the corresponding activity at site. The respective module for operation & maintenance shall be delivered and successfully test run at least three months before scheduled first synchronization of first unit. **4. e-Learning course broad requirements:** **a.** The courses shall be web based and mobile based Application type. It shall run on all possible versions of web browser like Internet Explorer, Google Chrome, Firefox etc. on Laptop/Desktop and shall be Smartphone/Tablet/Mobile responsive. The Mobile responsive courses shall run on Android, Windows Mobile, Blackberry, iOS etc. **b.** The courses shall support liquid/fluid page layout so that the entire screen gets adjusted to PC, Laptop, Smartphone/Mobile, Tablet and any other display devices. **c.** Course content text shall be in English language and be associated with a voiceover in English language with Indian accent. **d.** Courses shall be SCORM (Sharable Content Object Reference Model) compliant, version 1.2 which is compatible with LMS at PMI. **e.** Each course shall have every physical and functional detail of the equipment / system supplied. **f.** Each of the e-Learning course shall be based on multiple web pages and mobile pages with multiple modules. **g.** There shall be option for self-assessment test after every course. In case the user doesn't opt for self-assessment test the user shall be able to go to the next course. There shall be no restriction in no. of times for repeating the assessments. All correct answers along with the answers marked by the users shall be displayed at the end of test/quiz. **h.** If Java and Flash, as applicable are not available in the system to run the package, then there shall be a prompt message for updation of the same. **i.** Each course shall have a self-running interactive content with navigation buttons containing forward, backward, pause, bookmark and menu options in the course window. **j.** The course shall contain chapter titled 'Introduction/overview' that explains the purpose of the course.

CLAUSE NO.	GENERAL TECHNICAL REQUIREMENTS

k. The course content shall contain descriptive text shall be factual, specific, terse, clearly worded, and simply illustrative, so that the user can understand it.

l. The system shall provide the user with the ability to select the information with a Cursor.

m. The course menu should contain table of content linked to concerned pages. The user shall be given the capability to access all of the functions available on the system through a menu system. This shall consist of active buttons, which shall control a hierarchy of pull down/pop-up menus. Menu shall appear quickly and exist only while a selection is being made. The user shall be given the capability to position the cursor or pointer on the menu item and use pointer device such as mouse to activate the function.

n. Every course shall contain the 3D design/drawing/exploded view/360^0 turn around view of the equipment/system, textual description of the equipment/system and its functionality with video (as applicable), animation and audio.

o. The users shall be able to control audio sound level associated with the courses.

p. Drawings / text in the courses shall be scalable (Zoom In/ Out).

q. The user shall have the capability to record a **bookmark** to mark displayed information for later recall, whenever he accesses the same course next time.

Notes:

1. e-learning Package of an equipment / system shall include e-learning courses for each of erection, commissioning, operation and maintenance of that equipment / system.
2. e-learning courses on erection, commissioning, operation and maintenance of an equipment / system shall include e-learning lessons/chapters/modules (as required) for erection, commissioning, operation and maintenance respectively of that equipment / system.
3. The vendor shall get the approval of one sample course from Project Manager / EIC before proceeding for further courses.

	TECHNICAL SPECIFICATION & DATA SHEET FOR CONTROL VALVE WITH ACCESSORIES (PNEUMATICALLY OPERATED)	Specification No.: PE-TS-512-145-H104			
		Rev. No. 00			
		Date :30.12.2024			
SPECIFICATION & DATA SHEET FOR CONTROL VALVE					
A. GENERAL INFORMATION					
1	TAG NUMBER / SERVICE	ASV-8		D/A PEGGING FROM AUX. STEAM HEADER	
2	LOCATION / DUTY	OUTDOOR		MODULATING	
B. DESIGN CODES & STANDARDS					
3	CODE / STANDARD	REFER SPECIFIC NOTES			
C. TECHNICAL PARAMETERS / DESIGN FEATURES					
4	PIPE SIZE (OD X THK) mm	INLET	273 X 9.27	OUTLET	508 X 9.53
5	PIPE MATERIAL INLET / OUTLET	SA 106 GR B		SA 106 GR B	
6	VALVE BODY TYPE / MATERIAL/ SIZE OF VALVE	GLOBE	A217WC6	BIDDER TO FURNISH	
7	GUIDING / NO. OF PORTS / TRIM FORM	CAGE	ONE	LINEAR	
8	CAGE TYPE / CAGE MATERIAL / GUIDE BUSH Material	LO-DB	SS 316 STELLITED	SS 316 STELLITED	
9	MATERIAL: PLUG / STEM / SEAT / YOKE	SS 316 STELLITED	SS 316 STELLITED	SS 316 STELLITED	CARBON STEEL
10	PACKING MATERIAL / NOS / TYPE	GRAFOIL	SINGLE	STANDARD	
11	END CONNECTION / ANSI RATING / BONNET TYPE	BWE	BIDDER TO FURNISH	EXTENDED	
12	VALVE OUTLET VELOCITY	< 150 M/SEC(STEAM)			
13	LEAKAGE CLASS / NOISE LEVEL (dBA)	IV		< 85 dBA	
14	VACUUM SERVICE / ANTI CAVITATION TRIM	NO		NO	
15	ACTUATOR TYPE	PNEUMATIC			
16	TRAVEL TIME FOR OPEN TO CLOSE, CLOSE TO OPEN	LESS THAN 10 SEC			
17	VALVE POSN. ON: ELECTRICAL SIGNAL FAILURE / SUPPLY AIR FAILURE	TO OPEN		STAYPUT	
18	SMART POSITIONER / POSITION LIMIT SWITCH	REQUIRED(PROFIBUS)		NOT REQUIRED	
19	POSITION TRANSMITTER / E/P CONVERTER	PART OF SMART POSITIONER		PART OF SMART POSITIONER	
20	AIR FILTER REGULATOR / AIR LOCK RELAY	REQUIRED		REQUIRED	
21	SOLENOID VALVE / JUNCTION BOX	NOT REQUIRED		REQUIRED	
22	HAND WHEEL (SIDE MOUNTED) / LOCAL POSITIONER INDICATOR	REQUIRED		REQUIRED	
23	SERVICE CONDITIONS	FLOW (T/HR)	INLET PR KG/CM2(A)	OUTLET PR. KG/CM2(A)	TEMP DEG. C
24	CASE-1 7.5 % BMCR	19	16	1.65	310
25	CASE-2 15 % BMCR(COLD)	37	16	1.65	310
26	CASE-3 15 % BMCR(HOT)	53	16	3.65	310
27	CASE-4 25 % BMCR(COLD)	62	16	1.65	310
28	CASE-5 40% COLD (CHECK CASE)	98	16	1.65	310
29	MAX SHUT OFF PRESSURE,BODY DESIGN PRESSURE (KG/CM2 (g)) ,TEMP (DEG C)	20		20	350
30	IBR FORM-IIIC	REQUIRED			
31	PROCESS CONDITION	HIGH DP			
32	MODEL OF CONTROL VALVE	BIDDER TO FURNISH			
33	SIZE OF CONTROL VALVE	BIDDER TO FURNISH			
D. GUARANTEED PERFORMANCE REQUIREMENTS					
34	LINEARITY / HYSTERISIS / SENSITIVITY / OVERALL ACCURACY	+/- 1%	+/- 1%	+/- 0.5%	+/- 2%

File No. PEM-PG0MM(24)/1/2025-PS-PEM-PGI-1 (Computer No. 134626)
Generated from eOffice by Manoj Bhardwaj, ENGINEER(MB)-PG I-1-PS-PEM, ENGINEER, BHARAT HEAVY ELECTRICAL LTD on 07/01/2025 03:33 pm

	TECHNICAL SPECIFICATION & DATA SHEET FOR CONTROL VALVE WITH ACCESSORIES (PNEUMATICALLY OPERATED)	Specification No.: PE-TS-512-145-H104			
		Rev. No. 00			
		Date :30.12.2024			
SPECIFICATION & DATA SHEET FOR CONTROL VALVE					
A. GENERAL INFORMATION					
1	TAG NUMBER / SERVICE	CRHV-6		D/A PEGGING FROM CRH LINE	
2	LOCATION / DUTY	OUTDOOR		MODULATING	
B. DESIGN CODES & STANDARDS					
3	CODE / STANDARD	REFER SPECIFIC NOTES			
C. TECHNICAL PARAMETERS / DESIGN FEATURES					
4	PIPE SIZE (OD X THK) mm	INLET	406.4 X 21.44	OUTLET	965 x 38
5	PIPE MATERIAL INLET / OUTLET	SA 106 GR C		SA 106 GR C	
6	VALVE BODY TYPE / MATERIAL/ SIZE OF VALVE	GLOBE	A217WC6	BIDDER TO FURNISH	
7	GUIDING / NO. OF PORTS / TRIM FORM	CAGE	ONE	LINEAR	
8	CAGE TYPE / CAGE MATERIAL / GUIDE BUSH Material	STANDARD	SS 316 STELLITED	SS 316 STELLITED	
9	MATERIAL: PLUG / STEM / SEAT / YOKE	SS 316 STELLITED	SS 316 STELLITED	SS 316 STELLITED	CARBON STEEL
10	PACKING MATERIAL / NOS / TYPE	GRAFOIL	SINGLE	STANDARD	
11	END CONNECTION / ANSI RATING / BONNET TYPE	BWE	BIDDER TO FURNISH	EXTENDED	
12	VALVE OUTLET VELOCITY	< 150 M/SEC(STEAM)			
13	LEAKAGE CLASS / NOISE LEVEL (dBA)	IV		< 85 dBA	
14	VACUUM SERVICE / ANTI CAVITATION TRIM	NO		NO	
15	ACTUATOR TYPE	PNEUMATIC			
16	TRAVEL TIME FOR OPEN TO CLOSE, CLOSE TO OPEN	LESS THAN 10 SEC			
17	VALVE POSN. ON: ELECTRICAL SIGNAL FAILURE / SUPPLY AIR FAILURE	TO CLOSE		STAYPUT	
18	SMART POSITIONER / POSITION LIMIT SWITCH	REQUIRED(PROFIBUS)		NOT REQUIRED	
19	POSITION TRANSMITTER / E/P CONVERTER	PART OF SMART POSITIONER		PART OF SMART POSITIONER	
20	AIR FILTER REGULATOR / AIR LOCK RELAY	REQUIRED		REQUIRED	
21	SOLENOID VALVE / JUNCTION BOX	NOT REQUIRED		REQUIRED	
22	HAND WHEEL (SIDE MOUNTED) / LOCAL POSITIONER INDICATOR	REQUIRED		REQUIRED	
23	SERVICE CONDITIONS	FLOW (T/HR)	INLET PR KG/CM2(A)	OUTLET PR. KG/CM2(A)	TEMP DEG. C
24	CASE-1 65% BYPASS	241.6	38.39	3.65	360
25	CASE-2 15 % BMCR	53	20	3.65	355
26	CASE-3 HOUSE LOAD	241.6	38.39	3.65	360
27	CASE-4 START UP	82	13	1.55	252.2
28	MAX SHUT OFF PRESSURE,BODY DESIGN PRESSURE (KG/CM2 (g)), TEMP (DEG C)	76.2		76.2	387
29	IBR FORM-IIIC	REQUIRED			
30	PROCESS CONDITION	HIGH DP			
31	MODEL OF CONTROL VALVE	BIDDER TO FURNISH			
32	SIZE OF CONTROL VALVE	BIDDER TO FURNISH			
D. GUARENTEED PERFORMANCE REQUIREMENTS					
33	LINEARITY / HYSTERISIS / SENSITIVITY / OVERALL ACCURACY	+/- 1%	+/- 1%	+/- 0.5%	+/- 2%

बी एच ई एल BHEL	TECHNICAL SPECIFICATION & DATA SHEET FOR CONTROL VALVE WITH ACCESSORIES (PNEUMATICALLY OPERATED)	Specification No.: PE-TS-512-145-H104			
		Rev. No. 00			
		Date :30.12.2024			
SPECIFICATION & DATA SHEET FOR CONTROL VALVE					
A. GENERAL INFORMATION					
1	TAG NUMBER / SERVICE	CDV-25		LOW LOAD CONDENSATE CONTROL	
2	LOCATION / DUTY	INDOOR		MODULATING	
B. DESIGN CODES & STANDARDS					
3	CODE / STANDARD	REFER SPECIFIC NOTES			
C. TECHNICAL PARAMETERS / DESIGN FEATURES					
4	PIPE SIZE (OD X THK) mm	INLET	323.9 x 9.53	OUTLET	323.9 x 9.53
5	PIPE MATERIAL INLET / OUTLET	SA 106 GR B		SA 106 GR B	
6	VALVE BODY TYPE / MATERIAL / SIZE OF VALVE	GLOBE	A216WCB	BIDDER TO FURNISH	
7	GUIDING / NO. OF PORTS / TRIM FORM	CAGE	ONE	EQ %	
8	CAGE TYPE / CAGE MATERIAL / GUIDE BUSH Material	STANDARD	SS 316 STELLITED	SS 316 STELLITED	
9	MATERIAL: PLUG / STEM / SEAT / YOKE	SS 316 STELLITED	SS 316 STELLITED	SS 316 STELLITED	CARBON STEEL
10	PACKING MATERIAL / NOS / TYPE	GRAFOIL	SINGLE	STANDARD	
11	END CONNECTION / ANSI RATING / BONNET TYPE	BWE	BIDDER TO FURNISH	STANDARD	
12	VALVE OUTLET VELOCITY	< 7 M/SEC(WATER)			
13	LEAKAGE CLASS / NOISE LEVEL (dBA)	IV		< 85 dBA	
14	VACUUM SERVICE / ANTI CAVITATION TRIM	NO		NO	
15	ACTUATOR TYPE	PNEUMATIC			
16	TRAVEL TIME FOR OPEN TO CLOSE, CLOSE TO OPEN	LESS THAN 10 SEC			
17	VALVE POSN. ON: ELECTRICAL SIGNAL FAILURE / SUPPLY AIR FAILURE	TO OPEN		STAYPUT	
18	SMART POSITIONER / POSITION LIMIT SWITCH	REQUIRED(HART)		NOT REQUIRED	
19	POSITION TRANSMITTER / E/P CONVERTER	PART OF SMART POSITIONER		PART OF SMART POSITIONER	
20	AIR FILTER REGULATOR / AIR LOCK RELAY	REQUIRED		REQUIRED	
21	SOLENOID VALVE / JUNCTION BOX	NOT REQUIRED		REQUIRED	
22	HAND WHEEL (SIDE MOUNTED) / LOCAL POSITIONER INDICATOR	REQUIRED		REQUIRED	
23	SERVICE CONDITIONS	FLOW (T/HR)	INLET PR KG/CM2(A)	OUTLET PR. KG/CM2(A)	TEMP DEG. C
24	CASE-1 Min. (10% TMCR flow)	165.37	20	4.9	48.7
25	CASE-2 30% TMCR	592.7	20	9.1	48.7
27	CASE-3 50% TMCR	812.7	20	12.6	47.9
29	CASE-4 65% TMCR	1028	20	15	47.5
30	CASE-5 80% TMCR (CHECK CASE)	1246	21.74	18.74	47.2
30	CASE-6 HP/LP BYPASS(CHECK CASE)	1656	34	25	47
31	MAX SHUT OFF PRESSURE,BODY DESIGN PRESSURE (KG/CM2 (g)), TEMP (DEG C)	45		45	55
32	IBR FORM-IIIC	NOT REQUIRED			
33	PROCESS CONDITION	--			
34	MODEL OF CONTROL VALVE	BIDDER TO FURNISH			
35	SIZE OF CONTROL VALVE	BIDDER TO FURNISH			
D. GUARENTEED PERFORMANCE REQUIREMENTS					
36	LINEARITY / HYSTERISIS / SENSITIVITY / OVERALL ACCURACY	+/- 1%	+/- 1%	+/- 0.5%	+/- 2%

	TECHNICAL SPECIFICATION & DATA SHEET FOR CONTROL VALVE WITH ACCESSORIES (PNEUMATICALLY OPERATED)	Specification No.: PE-TS-512-145-H104			
		Rev. No. 00			
		Date :30.12.2024			
SPECIFICATION & DATA SHEET FOR CONTROL VALVE					
A. GENERAL INFORMATION					
1	TAG NUMBER / SERVICE	CDV-39		GSC/CEP MIN. FLOW RECIRCULATION	
2	LOCATION / DUTY	INDOOR		MODULATING	
B. DESIGN CODES & STANDARDS					
3	CODE / STANDARD	REFER SPECIFIC NOTES			
C. TECHNICAL PARAMETERS / DESIGN FEATURES					
4	PIPE SIZE (OD X THK) mm	INLET	219.1 X 12.7	OUTLET	219.1 X 12.7
5	PIPE MATERIAL INLET / OUTLET	SA 106 GR B		SA 106 GR B	
6	VALVE BODY TYPE / MATERIAL / SIZE OF VALVE	GLOBE	A217WC9	BIDDER TO FURNISH	
7	GUIDING / NO. OF PORTS / TRIM FORM	CAGE	ONE	EQ %	
8	CAGE TYPE / CAGE MATERIAL / GUIDE BUSH Material	ANTI-CAVITATION	17-4 PH SS	17-4 PH SS	
9	MATERIAL: PLUG / STEM / SEAT / YOKE	17-4 PH SS	17-4 PH SS	17-4 PH SS	CARBON STEEL
10	PACKING MATERIAL / NOS / TYPE	GRAFOIL	DOUBLE	V-CHEVRON	
11	END CONNECTION / ANSI RATING / BONNET TYPE	BWE	BIDDER TO FURNISH	STANDARD	
12	VALVE OUTLET VELOCITY	< 7 M/SEC(WATER)			
13	LEAKAGE CLASS / NOISE LEVEL (dBA)	V		< 85 dBA	
14	VACUUM SERVICE / ANTI CAVITATION TRIM	YES		YES	
15	ACTUATOR TYPE	PNEUMATIC			
16	TRAVEL TIME FOR OPEN TO CLOSE, CLOSE TO OPEN	LESS THAN 10 SEC			
17	VALVE POSN. ON: ELECTRICAL SIGNAL FAILURE / SUPPLY AIR FAILURE	TO OPEN		STAYPUT	
18	SMART POSITIONER / POSITION LIMIT SWITCH	REQUIRED(PROFIBUS)		NOT REQUIRED	
19	POSITION TRANSMITTER / E/P CONVERTER	PART OF SMART POSITIONER		PART OF SMART POSITIONER	
20	AIR FILTER REGULATOR / AIR LOCK RELAY	REQUIRED		REQUIRED	
21	SOLENOID VALVE / JUNCTION BOX	NOT REQUIRED		REQUIRED	
22	HAND WHEEL (SIDE MOUNTED) / LOCAL POSITIONER INDICATOR	REQUIRED		REQUIRED	
23	SERVICE CONDITIONS (LOAD)	FLOW (T/HR)	INLET PR KG/CM2(A)	OUTLET PR. KG/CM2(A)	TEMP DEG. C
24	GSC Min Flow R/C	32.4	20	0.61	46.8
25	Min R/C at Max. speed	324	40	0.6	46.8
26	Max Capability(CHECK CASE)	640	20	0.6	46.8
27	MAX SHUT OFF PRESSURE,BODY DESIGN PRESSURE (KG/CM2 (g)), TEMP (DEG C)	45		45	55
28	IBR FORM-IIIC	NOT REQUIRED			
29	PROCESS CONDITION	HIGH DP,CAVITATION			
30	MODEL OF CONTROL VALVE	BIDDER TO FURNISH			
31	SIZE OF CONTROL VALVE	BIDDER TO FURNISH			
D. GUARENTEED PERFORMANCE REQUIREMENTS					
32	LINEARITY / HYSTERISIS / SENSITIVITY / OVERALL ACCURACY	+/- 1%	+/- 1%	+/- 0.5%	+/- 2%

	TECHNICAL SPECIFICATION & DATA SHEET FOR CONTROL VALVE WITH ACCESSORIES (PNEUMATICALLY OPERATED)	Specification No.: PE-TS-512-145-H104			
		Rev. No. 00			
		Date :30.12.2024			
SPECIFICATION & DATA SHEET FOR CONTROL VALVE					
A. GENERAL INFORMATION					
1	TAG NUMBER / SERVICE	CDV-65,CDV-67,CDV-69		CEP-A,B,C MIN FLOW RECIRCULATION	
2	LOCATION / DUTY	INDOOR		MODULATING	
B. DESIGN CODES & STANDARDS					
3	CODE / STANDARD	REFER SPECIFIC NOTES			
C. TECHNICAL PARAMETERS / DESIGN FEATURES					
4	PIPE SIZE (OD X THK) mm	INLET	168.3 x 7.11	OUTLET	168.3 x 7.11
5	PIPE MATERIAL INLET / OUTLET	SA 106 GR B		SA 106 GR B	
6	VALVE BODY TYPE / MATERIAL / SIZE OF VALVE	GLOBE	A217WC9	BIDDER TO FURNISH	
7	GUIDING / NO. OF PORTS / TRIM FORM	CAGE	ONE	EQ %	
8	CAGE TYPE / CAGE MATERIAL / GUIDE BUSH Material	ANTI-CAVITATION	17-4 PH SS	17-4 PH SS	
9	MATERIAL: PLUG / STEM / SEAT / YOKE	17-4 PH SS	17-4 PH SS	17-4 PH SS	CARBON STEEL
10	PACKING MATERIAL / NOS / TYPE	GRAFOIL	DOUBLE	V-CHEVRON	
11	END CONNECTION / ANSI RATING / BONNET TYPE	BWE	BIDDER TO FURNISH	STANDARD	
12	VALVE OUTLET VELOCITY	< 7 M/SEC(WATER)			
13	LEAKAGE CLASS / NOISE LEVEL (dBA)	V		< 85 dBA	
14	VACUUM SERVICE / ANTI CAVITATION TRIM	YES		YES	
15	ACTUATOR TYPE	PNEUMATIC			
16	TRAVEL TIME FOR OPEN TO CLOSE, CLOSE TO OPEN	LESS THAN 10 SEC			
17	VALVE POSN. ON: ELECTRICAL SIGNAL FAILURE / SUPPLY AIR FAILURE	TO OPEN		STAYPUT	
18	SMART POSITIONER / POSITION LIMIT SWITCH	REQUIRED(HART)		NOT REQUIRED	
19	POSITION TRANSMITTER / E/P CONVERTER	PART OF SMART POSITIONER		PART OF SMART POSITIONER	
20	AIR FILTER REGULATOR / AIR LOCK RELAY	REQUIRED		REQUIRED	
21	SOLENOID VALVE / JUNCTION BOX	REQUIRED		REQUIRED	
22	HAND WHEEL (SIDE MOUNTED) / LOCAL POSITIONER INDICATOR	REQUIRED		REQUIRED	
23	SERVICE CONDITIONS (LOAD)	FLOW (T/HR)	INLET PR KG/CM2(A)	OUTLET PR. KG/CM2(A)	TEMP DEG. C
24	CEP Min flow R/C	32	21	0.6	46.3
25	Min Recir at Min. speed	318	21	0.6	46.3
26	Min Recir at Max. speed	318	42	0.6	46.3
27	MAX SHUT OFF PRESSURE,BODY DESIGN PRESSURE (KG/CM2 (g)), TEMP (DEG C)		45	45/VACCUM	55
28	IBR FORM-IIIC	NOT REQUIRED			
29	PROCESS CONDITION	HIGH DP,CAVITATION			
30	MODEL OF CONTROL VALVE	BIDDER TO FURNISH			
31	SIZE OF CONTROL VALVE	BIDDER TO FURNISH			
D. GUARENTEED PERFORMANCE REQUIREMENTS					
32	LINEARITY / HYSTERISIS / SENSITIVITY / OVERALL ACCURACY	+/- 1%	+/- 1%	+/- 0.5%	+/- 2%

File No. PEM-PG0MM(24)/1/2025-PS-PEM-PGI-1 (Computer No. 134626)
Generated from eOffice by Manoj Bhardwaj, ENGINEER(MB)-PG I-1-PS-PEM, ENGINEER, BHARAT HEAVY ELECTRICAL LTD on 07/01/2025 03:33 pm

	TECHNICAL SPECIFICATION & DATA SHEET FOR CONTROL VALVE WITH ACCESSORIES (PNEUMATICALLY OPERATED)	Specification No.: PE-TS-512-145-H104			
		Rev. No. 00			
		Date :30.12.2024			
SPECIFICATION & DATA SHEET FOR CONTROL VALVE					
A. GENERAL INFORMATION					
1	TAG NUMBER / SERVICE	CDV-43		EXCESS DUMP CONTROL	
2	LOCATION / DUTY	INDOOR		MODULATING	
B. DESIGN CODES & STANDARDS					
3	CODE / STANDARD	REFER SPECIFIC NOTES			
C. TECHNICAL PARAMETERS / DESIGN FEATURES					
4	PIPE SIZE (OD X THK) mm	INLET	323.9X9.53	OUTLET	323.9X9.53
5	PIPE MATERIAL INLET / OUTLET	SA 106 GR C		SA 106 GR C	
6	VALVE BODY TYPE / MATERIAL / SIZE OF VALVE	GLOBE	A216WCB	BIDDER TO FURNISH	
7	GUIDING / NO. OF PORTS / TRIM FORM	CAGE	ONE	EQ %	
8	CAGE TYPE / CAGE MATERIAL / GUIDE BUSH Material	STANDARD	SS 316 STELLITED	SS 316 STELLITED	
9	MATERIAL: PLUG / STEM / SEAT / YOKE	SS 316 STELLITED	SS 316 STELLITED	SS 316 STELLITED	CARBON STEEL
10	PACKING MATERIAL / NOS / TYPE	GRAFOIL	SINGLE	STANDARD	
11	END CONNECTION / ANSI RATING / BONNET TYPE	BWE	BIDDER TO FURNISH	STANDARD	
12	VALVE OUTLET VELOCITY	< 7 M/SEC(WATER)			
13	LEAKAGE CLASS / NOISE LEVEL (dBA)	V		< 85 dBA	
14	VACUUM SERVICE / ANTI CAVITATION TRIM	NO		NO	
15	ACTUATOR TYPE	PNEUMATIC			
16	TRAVEL TIME FOR OPEN TO CLOSE, CLOSE TO OPEN	LESS THAN 10 SEC			
17	VALVE POSN. ON: ELECTRICAL SIGNAL FAILURE / SUPPLY AIR FAILURE	TO OPEN		STAYPUT	
18	SMART POSITIONER / POSITION LIMIT SWITCH	REQUIRED(PROFIBUS)		NOT REQUIRED	
19	POSITION TRANSMITTER / E/P CONVERTER	PART OF SMART POSITIONER		PART OF SMART POSITIONER	
20	AIR FILTER REGULATOR / AIR LOCK RELAY	REQUIRED		REQUIRED	
21	SOLENOID VALVE / JUNCTION BOX	NOT REQUIRED		REQUIRED	
22	HAND WHEEL (SIDE MOUNTED) / LOCAL POSITIONER INDICATOR	REQUIRED		REQUIRED	
23	SERVICE CONDITIONS (LOAD)	FLOW (T/HR)	INLET PR KG/CM2(A)	OUTLET PR. KG/CM2(A)	TEMP DEG. C
24	MIN FLOW	41	20	1.8	48.2
25	MIN SPEED	410	20	1.79	48.2
26	MAX SPEED	410	42	1.8	48.2
27	CHECK CASE(FOR FLEXIBLE OPERATION)	900	25	1.8	48.2
28	MAX SHUT OFF PRESSURE,BODY DESIGN PRESSURE (KG/CM2 (g)), TEMP (DEG C)		45	45	55
29	IBR FORM-IIIC	NOT REQUIRED			
30	PROCESS CONDITION	HIGH DP			
31	MODEL OF CONTROL VALVE	BIDDER TO FURNISH			
32	SIZE OF CONTROL VALVE	BIDDER TO FURNISH			
D. GUARENTEED PERFORMANCE REQUIREMENTS					
33	LINEARITY / HYSTERISIS / SENSITIVITY / OVERALL ACCURACY	+/- 1%	+/- 1%	+/- 0.5%	+/- 2%

	TECHNICAL SPECIFICATION & DATA SHEET FOR CONTROL VALVE WITH ACCESSORIES (PNEUMATICALLY OPERATED)	Specification No.: PE-TS-512-145-H104			
		Rev. No. 00			
		Date :30.12.2024			
SPECIFICATION & DATA SHEET FOR CONTROL VALVE					
A. GENERAL INFORMATION					
1	TAG NUMBER / SERVICE	CDV-72		CONDENSATE FOR VALVE GLAND SEALING & F/T	
2	LOCATION / DUTY	INDOOR		MODULATING	
B. DESIGN CODES & STANDARDS					
3	CODE / STANDARD	REFER SPECIFIC NOTES			
C. TECHNICAL PARAMETERS / DESIGN FEATURES					
4	PIPE SIZE (OD X THK) mm	INLET	60.3 x 5.54	OUTLET	60.3 x 5.54
5	PIPE MATERIAL INLET / OUTLET	SA 106 GR B		SA 106 GR B	
6	VALVE BODY TYPE / MATERIAL / SIZE OF VALVE	GLOBE	A216WCB	BIDDER TO FURNISH	
7	GUIDING / NO. OF PORTS / TRIM FORM	CAGE	ONE	EQ %	
8	CAGE TYPE / CAGE MATERIAL / GUIDE BUSH Material	STANDARD	SS 316 STELLITED	SS 316 STELLITED	
9	MATERIAL: PLUG / STEM / SEAT / YOKE	SS 316 STELLITED	SS 316 STELLITED	SS 316 STELLITED	CARBON STEEL
10	PACKING MATERIAL / NOS / TYPE	GRAFOIL	SINGLE	STANDARD	
11	END CONNECTION / ANSI RATING / BONNET TYPE	BWE	BIDDER TO FURNISH	STANDARD	
12	FLOW ACTION / VALVE OUTLET VELOCITY	< 7 M/SEC(WATER)			
13	LEAKAGE CLASS / NOISE LEVEL (dBA)	V		< 85 dBA	
14	VACUUM SERVICE / ANTI CAVITATION TRIM	NO		NO	
15	ACTUATOR TYPE	PNEUMATIC			
16	TRAVEL TIME FOR OPEN TO CLOSE, CLOSE TO OPEN	LESS THAN 10 SEC			
17	VALVE POSN. ON: ELECTRICAL SIGNAL FAILURE / SUPPLY AIR FAILURE	TO OPEN		STAYPUT	
18	SMART POSITIONER / POSITION LIMIT SWITCH	REQUIRED(PROFIBUS)		NOT REQUIRED	
19	POSITION TRANSMITTER / E/P CONVERTER	PART OF SMART POSITIONER		PART OF SMART POSITIONER	
20	AIR FILTER REGULATOR / AIR LOCK RELAY	REQUIRED		REQUIRED	
21	SOLENOID VALVE / JUNCTION BOX	NOT REQUIRED		REQUIRED	
22	HAND WHEEL (SIDE MOUNTED) / LOCAL POSITIONER INDICATOR	REQUIRED		REQUIRED	
23	SERVICE CONDITIONS (LOAD)	FLOW (T/HR)	INLET PR KG/CM2(A)	OUTLET PR. KG/CM2(A)	TEMP DEG. C
24	Min Condensate to Valve GS	4	20	1.1	47.3
25	MIN.	10	20	2.61	47.3
26	MAX.	10	42	2.61	47.3
27	MAX SHUT OFF PRESSURE,BODY DESIGN PRESSURE (KG/CM2 (g)), TEMP (DEG C)	45		45	55
28	IBR FORM-IIIC	NOT REQUIRED			
29	PROCESS CONDITION				
30	MODEL OF CONTROL VALVE	BIDDER TO FURNISH			
31	SIZE OF CONTROL VALVE	BIDDER TO FURNISH			
D. GUARENTEED PERFORMANCE REQUIREMENTS					
32	LINEARITY / HYSTERISIS / SENSITIVITY / OVERALL ACCURACY	+/- 1%	+/- 1%	+/- 0.5%	+/- 2%

File No. PEM-PG0MM(24)/1/2025-PS-PEM-PGI-1 (Computer No. 134626)
Generated from eOffice by Manoj Bhardwaj, ENGINEER(MB)-PG I-1-PS-PEM, ENGINEER, BHARAT HEAVY ELECTRICAL LTD on 07/01/2025 03:33 pm

	TECHNICAL SPECIFICATION & DATA SHEET FOR CONTROL VALVE WITH ACCESSORIES (PNEUMATICALLY OPERATED)	Specification No.: PE-TS-512-145-H104			
		Rev. No. 00			
		Date :30.12.2024			
SPECIFICATION & DATA SHEET FOR CONTROL VALVE					
A. GENERAL INFORMATION					
1	TAG NUMBER / SERVICE	CDV-84		CONDENSATE SPRAY FOR F/T	
2	LOCATION / DUTY	INDOOR		ON/OFF	
B. DESIGN CODES & STANDARDS					
3	CODE / STANDARD	REFER SPECIFIC NOTES			
C. TECHNICAL PARAMETERS / DESIGN FEATURES					
4	PIPE SIZE (OD X THK) mm	INLET	33.4 x 4.55	OUTLET	33.4 x 4.55
5	PIPE MATERIAL INLET / OUTLET	SA 106 GR B		SA 106 GR B	
6	VALVE BODY TYPE / MATERIAL / SIZE OF VALVE	GLOBE	A217WC9	BIDDER TO FURNISH	
7	GUIDING / NO. OF PORTS / TRIM FORM	CAGE	ONE	ON-OFF(QUICK OPEN)	
8	CAGE TYPE / CAGE MATERIAL / GUIDE BUSH Material	ANTI-CAVITATION	SS 316 STELLITED	SS 316 STELLITED	
9	MATERIAL: PLUG / STEM / SEAT / YOKE	SS 316 STELLITED	SS 316 STELLITED	SS 316 STELLITED	CARBON STEEL
10	PACKING MATERIAL / NOS / TYPE	GRAFOIL	DOUBLE	V-CHEVRON	
11	END CONNECTION / ANSI RATING / BONNET TYPE	BWE	BIDDER TO FURNISH	STANDARD	
12	FLOW ACTION / VALVE OUTLET VELOCITY	< 7 M/SEC(WATER)			
13	LEAKAGE CLASS / NOISE LEVEL (dBA)	V		< 85 dBA	
14	VACUUM SERVICE / ANTI CAVITATION TRIM	YES		YES	
15	ACTUATOR TYPE	PNEUMATIC			
16	TRAVEL TIME FOR OPEN TO CLOSE, CLOSE TO OPEN	LESS THAN 10 SEC			
17	VALVE POSN. ON: ELECTRICAL SIGNAL FAILURE / SUPPLY AIR FAILURE	TO OPEN		STAYPUT	
18	SMART POSITIONER / POSITION LIMIT SWITCH	NOT REQUIRED		REQUIRED	
19	POSITION TRANSMITTER / E/P CONVERTER	NOT REQUIRED		NOT REQUIRED	
20	AIR FILTER REGULATOR / AIR LOCK RELAY	REQUIRED		REQUIRED	
21	SOLENOID VALVE / JUNCTION BOX	REQUIRED		REQUIRED	
22	HAND WHEEL (SIDE MOUNTED) / LOCAL POSITIONER INDICATOR	REQUIRED		REQUIRED	
23	SERVICE CONDITIONS (LOAD)	FLOW (T/HR)	INLET PR KG/CM2(A)	OUTLET PR. KG/CM2(A)	TEMP DEG. C
25	MIN. SPEED	10	20	0.2	47.3
26	MAX. SPEED	10	42	0.2	47.3
27	MAX SHUT OFF PRESSURE,BODY DESIGN PRESSURE (KG/CM2 (g)), TEMP (DEG C)		45	45	55
28	IBR FORM-IIIC	NOT REQUIRED			
29	PROCESS CONDITION	CAVITATION, HIGH DP			
30	MODEL OF CONTROL VALVE	BIDDER TO FURNISH			
31	SIZE OF CONTROL VALVE	BIDDER TO FURNISH			
D. GUARENTEED PERFORMANCE REQUIREMENTS					
32	LINEARITY / HYSTERISIS / SENSITIVITY / OVERALL ACCURACY	NA	NA	NA	NA

	TECHNICAL SPECIFICATION & DATA SHEET FOR CONTROL VALVE WITH ACCESSORIES (PNEUMATICALLY OPERATED)	Specification No.: PE-TS-512-145-H104			
		Rev. No. 00			
		Date :30.12.2024			
SPECIFICATION & DATA SHEET FOR CONTROL VALVE					
A. GENERAL INFORMATION					
1	TAG NUMBER / SERVICE	CDV-94		CONDENSATE SPRAY FOR UNIT F/T	
2	LOCATION / DUTY	INDOOR		ON/OFF	
B. DESIGN CODES & STANDARDS					
3	CODE / STANDARD	REFER SPECIFIC NOTES			
C. TECHNICAL PARAMETERS / DESIGN FEATURES					
4	PIPE SIZE (OD X THK) mm	INLET	33.4 x 4.55	OUTLET	33.4 x 4.55
5	PIPE MATERIAL INLET / OUTLET	SA 106 GR B		SA 106 GR B	
6	VALVE BODY TYPE / MATERIAL / SIZE OF VALVE	GLOBE	A217WC9	BIDDER TO FURNISH	
7	GUIDING / NO. OF PORTS / TRIM FORM	CAGE	ONE	ON-OFF(QUICK OPEN)	
8	CAGE TYPE / CAGE MATERIAL / GUIDE BUSH Material	ANTI-CAVITATION	SS 316 STELLITED	SS 316 STELLITED	
9	MATERIAL: PLUG / STEM / SEAT / YOKE	SS 316 STELLITED	SS 316 STELLITED	SS 316 STELLITED	CARBON STEEL
10	PACKING MATERIAL / NOS / TYPE	GRAFOIL	DOUBLE	V-CHEVRON	
11	END CONNECTION / ANSI RATING / BONNET TYPE	BWE	BIDDER TO FURNISH	STANDARD	
12	FLOW ACTION / VALVE OUTLET VELOCITY	< 7 M/SEC(WATER)			
13	LEAKAGE CLASS / NOISE LEVEL (dBA)	V		< 85 dBA	
14	VACUUM SERVICE / ANTI CAVITATION TRIM	YES		YES	
15	ACTUATOR TYPE	PNEUMATIC			
16	TRAVEL TIME FOR OPEN TO CLOSE, CLOSE TO OPEN	LESS THAN 10 SEC			
17	VALVE POSN. ON: ELECTRICAL SIGNAL FAILURE / SUPPLY AIR FAILURE	TO OPEN		STAYPUT	
18	SMART POSITIONER / POSITION LIMIT SWITCH	NOT REQUIRED		REQUIRED	
19	POSITION TRANSMITTER / E/P CONVERTER	NOT REQUIRED		NOT REQUIRED	
20	AIR FILTER REGULATOR / AIR LOCK RELAY	REQUIRED		REQUIRED	
21	SOLENOID VALVE / JUNCTION BOX	REQUIRED		REQUIRED	
22	HAND WHEEL (SIDE MOUNTED) / LOCAL POSITIONER INDICATOR	REQUIRED		REQUIRED	
23	SERVICE CONDITIONS (LOAD)	FLOW (T/HR)	INLET PR KG/CM2(A)	OUTLET PR. KG/CM2(A)	TEMP DEG. C
24	CONDITION-1	10	3	1	33
26	MAX SHUT OFF PRESSURE,BODY DESIGN PRESSURE (KG/CM2 (g)), TEMP (DEG C)	15		15	50
27	IBR FORM-IIIC	NOT REQUIRED			
28	PROCESS CONDITION	CAVITATION			
29	MODEL OF CONTROL VALVE	BIDDER TO FURNISH			
30	SIZE OF CONTROL VALVE	BIDDER TO FURNISH			
D. GUARENTEED PERFORMANCE REQUIREMENTS					
31	LINEARITY / HYSTERISIS / SENSITIVITY / OVERALL ACCURACY	NA	NA	NA	NA

	TECHNICAL SPECIFICATION & DATA SHEET FOR CONTROL VALVE WITH ACCESSORIES (PNEUMATICALLY OPERATED)	Specification No.: PE-TS-512-145-H104			
		Rev. No. 00			
		Date :30.12.2024			
SPECIFICATION & DATA SHEET FOR CONTROL VALVE					
A. GENERAL INFORMATION					
1	TAG NUMBER / SERVICE	DRV-53 & DRV59		HPH-9A/9B NORMAL DRAIN TO HPH-8A/8B	
2	LOCATION / DUTY	INDOOR		MODULATING	
B. DESIGN CODES & STANDARDS					
3	CODE / STANDARD	REFER SPECIFIC NOTES			
C. TECHNICAL PARAMETERS / DESIGN FEATURES					
4	PIPE SIZE (OD X THK) mm	INLET	168.3 x 10.97	OUTLET	168.3 x 10.97
5	PIPE MATERIAL INLET / OUTLET	SA 106 GR C		SA 106 GR C	
6	VALVE BODY TYPE / MATERIAL / SIZE OF VALVE	GLOBE	A217WC6	BIDDER TO FURNISH	
7	GUIDING / NO. OF PORTS / TRIM FORM	CAGE	ONE	LINEAR	
8	CAGE TYPE / CAGE MATERIAL / GUIDE BUSH Material	STANDARD	17-4PH SS	17-4PH SS	
9	MATERIAL: PLUG / STEM/SEAT/YOKE	17-4PH SS	17-4PH SS	17-4PH SS	CARBON STEEL
10	PACKING MATERIAL / NOS / TYPE	GRAFOIL	SINGLE	STANDARD	
11	END CONNECTION / ANSI RATING / BONNET TYPE	BWE	BIDDER TO FURNISH	STANDARD	
12	FLOW ACTION / VALVE OUTLET VELOCITY	< 7 M/SEC(WATER)			
13	LEAKAGE CLASS / NOISE LEVEL (dBA)	IV		< 85 dBA	
14	VACUUM SERVICE / ANTI CAVITATION TRIM	NO		NO	
15	ACTUATOR TYPE	PNEUMATIC			
16	TRAVEL TIME FOR OPEN TO CLOSE, CLOSE TO OPEN	LESS THAN 10 SEC			
17	VALVE POSN. ON: ELECTRICAL SIGNAL FAILURE / SUPPLY AIR FAILURE	TO CLOSE		TO CLOSE	
18	SMART POSITIONER / POSITION LIMIT SWITCH	REQUIRED(PROFIBUS)		NOT REQUIRED	
19	POSITION TRANSMITTER / E/P CONVERTER	PART OF SMART POSITIONER		PART OF SMART POSITIONER	
20	AIR FILTER REGULATOR / AIR LOCK RELAY	REQUIRED		NOT REQUIRED	
21	SOLENOID VALVE / JUNCTION BOX	REQUIRED		REQUIRED	
22	HAND WHEEL (SIDE MOUNTED) / LOCAL POSITIONER INDICATOR	REQUIRED		REQUIRED	
23	SERVICE CONDITIONS (LOAD)	FLOW (T/HR)	INLET PR KG/CM2(A)	OUTLET PR. KG/CM2(A)	TEMP DEG. C
24	40% LOAD	23.98	39.9	27.1	229.9
25	60% LOAD	37.3	57.3	39.1	251.8
26	100%LOAD	84.68	92.5	63.4	282.1
27	VWO	93.7	98.4	67.2	286.4
28	20% LOAD	14	23.4	17.4	200
29	MAX SHUT OFF PRESSURE,BODY DESIGN PRESSURE (KG/CM2 (g)), TEMP (DEG C)	110		110	290
30	IBR FORM-IIIC	NOT REQUIRED			
31	PROCESS CONDITION	FLASHING			
32	MODEL OF CONTROL VALVE	BIDDER TO FURNISH			
33	SIZE OF CONTROL VALVE	BIDDER TO FURNISH			
D. GUARENTEED PERFORMANCE REQUIREMENTS					
34	LINEARITY / HYSTERISIS / SENSITIVITY / OVERALL ACCURACY	+/- 1%	+/- 1%	+/- 0.5%	+/- 2%

	TECHNICAL SPECIFICATION & DATA SHEET FOR CONTROL VALVE WITH ACCESSORIES (PNEUMATICALLY OPERATED)	Specification No.: PE-TS-512-145-H104			
		Rev. No. 00			
		Date :30.12.2024			
SPECIFICATION & DATA SHEET FOR CONTROL VALVE					
A. GENERAL INFORMATION					
1	TAG NUMBER / SERVICE	DRV-56 & DRV-62		HPH-9A/9B ALT. DRAIN TO F/T	
2	LOCATION / DUTY	INDOOR		MODULATING	
B. DESIGN CODES & STANDARDS					
3	CODE / STANDARD	REFER SPECIFIC NOTES			
C. TECHNICAL PARAMETERS / DESIGN FEATURES					
4	PIPE SIZE (OD X THK) mm	INLET	219.1X12.7	OUTLET	219.1 x 12.7
5	PIPE MATERIAL INLET / OUTLET	SA 106 GR C		SA 106 GR C	
6	VALVE BODY TYPE / MATERIAL / SIZE OF VALVE	GLOBE	A217WC9	BIDDER TO FURNISH	
7	GUIDING / NO. OF PORTS / TRIM FORM	CAGE	ONE	LINEAR	
8	CAGE TYPE / CAGE MATERIAL / GUIDE BUSH Material	STANDARD	440C	440C	
9	MATERIAL: PLUG / STEM/SEAT/YOKE	440C	440C	440C	CARBON STEEL
10	PACKING MATERIAL / NOS / TYPE	GRAFOIL	DOUBLE	V-CHEVRON	
11	END CONNECTION / ANSI RATING / BONNET TYPE	BWE	BIDDER TO FURNISH	STANDARD	
12	FLOW ACTION / VALVE OUTLET VELOCITY	< 7 M/SEC(WATER)			
13	LEAKAGE CLASS / NOISE LEVEL (dBA)	V		< 85 dBA	
14	VACUUM SERVICE / ANTI CAVITATION TRIM	YES		NO	
15	ACTUATOR TYPE	PNEUMATIC			
16	TRAVEL TIME FOR OPEN TO CLOSE, CLOSE TO OPEN	LESS THAN 10 SEC			
17	VALVE POSN. ON: ELECTRICAL SIGNAL FAILURE / SUPPLY AIR FAILURE	TO OPEN		TO OPEN	
18	SMART POSITIONER / POSITION LIMIT SWITCH	REQUIRED(HART)		NOT REQUIRED	
19	POSITION TRANSMITTER / E/P CONVERTER	PART OF SMART POSITIONER		PART OF SMART POSITIONER	
20	AIR FILTER REGULATOR / AIR LOCK RELAY	REQUIRED		NOT REQUIRED	
21	SOLENOID VALVE / JUNCTION BOX	REQUIRED		REQUIRED	
22	HAND WHEEL (SIDE MOUNTED) / LOCAL POSITIONER INDICATOR	REQUIRED		REQUIRED	
23	SERVICE CONDITIONS (LOAD)	FLOW (T/HR)	INLET PR KG/CM2(A)	OUTLET PR. KG/CM2(A)	TEMP DEG. C
24	40% LOAD	23.98	40.9	0.2	249
25	60% LOAD	37.3	58.1	0.2	271.5
26	100%LOAD	84.68	93.1	0.2	304.1
27	VWO	93.7	98.8	0.2	308.6
28	20%LOAD	14	23.4	0.2	218.1
29	MAX SHUT OFF PRESSURE,BODY DESIGN PRESSURE (KG/CM2 (g)), TEMP (DEG C)	110		110/VACCUM	310
30	IBR FORM-IIIC	NOT REQUIRED			
31	PROCESS CONDITION	FLASHING,HIGH DP			
32	MODEL OF CONTROL VALVE	BIDDER TO FURNISH			
33	SIZE OF CONTROL VALVE	BIDDER TO FURNISH			
D. GUARENTEED PERFORMANCE REQUIREMENTS					
34	LINEARITY / HYSTERISIS / SENSITIVITY / OVERALL ACCURACY	+/- 1%	+/- 1%	+/- 0.5%	+/- 2%

	TECHNICAL SPECIFICATION & DATA SHEET FOR CONTROL VALVE WITH ACCESSORIES (PNEUMATICALLY OPERATED)	Specification No.: PE-TS-512-145-H104			
		Rev. No. 00			
		Date :30.12.2024			
SPECIFICATION & DATA SHEET FOR CONTROL VALVE					
A. GENERAL INFORMATION					
1	TAG NUMBER / SERVICE	DRV-2 & DRV-8		HPH-8A/8B NORMAL DRAIN TO HPH-7A/7B	
2	LOCATION / DUTY	INDOOR		MODULATING	
B. DESIGN CODES & STANDARDS					
3	CODE / STANDARD	REFER SPECIFIC NOTES			
C. TECHNICAL PARAMETERS / DESIGN FEATURES					
4	PIPE SIZE (OD X THK) mm	INLET	273 x 12.7	OUTLET	273 x 12.7
5	PIPE MATERIAL INLET / OUTLET	SA 106 GR C		SA 106 GR C	
6	VALVE BODY TYPE / MATERIAL / SIZE OF VALVE	GLOBE	A217WC6	BIDDER TO FURNISH	
7	GUIDING / NO. OF PORTS / TRIM FORM	CAGE	ONE	LINEAR	
8	CAGE TYPE / CAGE MATERIAL / GUIDE BUSH Material	STANDARD	17-4PH SS	17-4PH SS	
9	MATERIAL: PLUG / STEM/SEAT/YOKE	17-4PH SS	17-4PH SS	17-4PH SS	CARBON STEEL
10	PACKING MATERIAL / NOS / TYPE	GRAFOIL	SINGLE	STANDARD	
11	END CONNECTION / ANSI RATING / BONNET TYPE	BWE	BIDDER TO FURNISH	STANDARD	
12	FLOW ACTION / VALVE OUTLET VELOCITY	< 7 M/SEC(WATER)			
13	LEAKAGE CLASS / NOISE LEVEL (dBA)	IV		< 85 dBA	
14	VACUUM SERVICE / ANTI CAVITATION TRIM	NO		NO	
15	ACTUATOR TYPE	PNEUMATIC			
16	TRAVEL TIME FOR OPEN TO CLOSE, CLOSE TO OPEN	LESS THAN 10 SEC			
17	VALVE POSN. ON: ELECTRICAL SIGNAL FAILURE / SUPPLY AIR FAILURE	TO CLOSE		TO CLOSE	
18	SMART POSITIONER / POSITION LIMIT SWITCH	REQUIRED(PROFIBUS)		NOT REQUIRED	
19	POSITION TRANSMITTER / E/P CONVERTER	PART OF SMART POSITIONER		PART OF SMART POSITIONER	
20	AIR FILTER REGULATOR / AIR LOCK RELAY	REQUIRED		NOT REQUIRED	
21	SOLENOID VALVE / JUNCTION BOX	REQUIRED		REQUIRED	
22	HAND WHEEL (SIDE MOUNTED) / LOCAL POSITIONER INDICATOR	REQUIRED		REQUIRED	
23	SERVICE CONDITIONS (LOAD)	FLOW (T/HR)	INLET PR KG/CM2(A)	OUTLET PR. KG/CM2(A)	TEMP DEG. C
24	40% LOAD	63.54	27.6	11.46	185.9
25	60% LOAD	100.334	39.5	16.3	202.8
26	100% LOAD	216.257	63.6	26.2	227.7
27	VWO	236.9	67.3	27.7	230.9
28	20% LOAD	36.6	15.6	6.8	162.3
29	MAX SHUT OFF PRESSURE,BODY DESIGN PRESSURE (KG/CM2 (g)), TEMP (DEG C)	76.2		76.2	240
30	IBR FORM-IIIC	NOT REQUIRED			
31	PROCESS CONDITION	FLASHING			
32	MODEL OF CONTROL VALVE	BIDDER TO FURNISH			
33	SIZE OF CONTROL VALVE	BIDDER TO FURNISH			
D. GUARENTEED PERFORMANCE REQUIREMENTS					
34	LINEARITY / HYSTERISIS / SENSITIVITY / OVERALL ACCURACY	+/- 1%	+/- 1%	+/- 0.5%	+/- 2%

	TECHNICAL SPECIFICATION & DATA SHEET FOR CONTROL VALVE WITH ACCESSORIES (PNEUMATICALLY OPERATED)	Specification No.: PE-TS-512-145-H104			
		Rev. No. 00			
		Date :30.12.2024			
SPECIFICATION & DATA SHEET FOR CONTROL VALVE					
A. GENERAL INFORMATION					
1	TAG NUMBER / SERVICE	DRV-5 & DRV-11		HPH-8A/8B ALT. DRAIN TO F/T	
2	LOCATION / DUTY	INDOOR		MODULATING	
B. DESIGN CODES & STANDARDS					
3	CODE / STANDARD	REFER SPECIFIC NOTES			
C. TECHNICAL PARAMETERS / DESIGN FEATURES					
4	PIPE SIZE (OD X THK) mm	INLET	273 x 12.7	OUTLET	323.9 x 12.7
5	PIPE MATERIAL INLET / OUTLET	SA 106 GR C		SA 106 GR C	
6	VALVE BODY TYPE / MATERIAL / SIZE OF VALVE	GLOBE	A217WC9	BIDDER TO FURNISH	
7	GUIDING / NO. OF PORTS / TRIM FORM	CAGE	ONE	LINEAR	
8	CAGE TYPE / CAGE MATERIAL / GUIDE BUSH Material	STANDARD	440C	440C	
9	MATERIAL: PLUG / STEM/SEAT/YOKE	440C	440C	440C	CARBON STEEL
10	PACKING MATERIAL / NOS / TYPE	GRAFOIL	DOUBLE	V-CHEVRON	
11	END CONNECTION / ANSI RATING / BONNET TYPE	BWE	BIDDER TO FURNISH	STANDARD	
12	FLOW ACTION / VALVE OUTLET VELOCITY	< 7 M/SEC(WATER)			
13	LEAKAGE CLASS / NOISE LEVEL (dBA)	V		< 85 dBA	
14	VACUUM SERVICE / ANTI CAVITATION TRIM	YES		NO	
15	ACTUATOR TYPE	PNEUMATIC			
16	TRAVEL TIME FOR OPEN TO CLOSE, CLOSE TO OPEN	LESS THAN 10 SEC			
17	VALVE POSN. ON: ELECTRICAL SIGNAL FAILURE / SUPPLY AIR FAILURE	TO OPEN		TO OPEN	
18	SMART POSITIONER / POSITION LIMIT SWITCH	REQUIRED(HART)		NOT REQUIRED	
19	POSITION TRANSMITTER / E/P CONVERTER	PART OF SMART POSITIONER		PART OF SMART POSITIONER	
20	AIR FILTER REGULATOR / AIR LOCK RELAY	REQUIRED		NOT REQUIRED	
21	SOLENOID VALVE / JUNCTION BOX	REQUIRED		REQUIRED	
22	HAND WHEEL (SIDE MOUNTED) / LOCAL POSITIONER INDICATOR	REQUIRED		REQUIRED	
23	SERVICE CONDITIONS (LOAD)	FLOW (T/HR)	INLET PR KG/CM2(A)	OUTLET PR. KG/CM2(A)	TEMP DEG. C
24	40% LOAD	63.54	27.6	0.2	226.8
25	60% LOAD	100.334	39.5	0.2	247.5
26	100%LOAD	216.257	63.6	0.2	277.7
27	VWO	236.9	67.3	0.2	281.5
28	20%LOAD	36.6	15.6	0.2	198.2
29	MAX SHUT OFF PRESSURE,BODY DESIGN PRESSURE (KG/CM2 (g)), TEMP (DEG C)	76.2		76.2/VACCUM	285
30	IBR FORM-IIIC	NOT REQUIRED			
31	PROCESS CONDITION	FLASHING,HIGH DP			
32	MODEL OF CONTROL VALVE	BIDDER TO FURNISH			
33	SIZE OF CONTROL VALVE	BIDDER TO FURNISH			
D. GUARENTEED PERFORMANCE REQUIREMENTS					
34	LINEARITY / HYSTERISIS / SENSITIVITY / OVERALL ACCURACY	+/- 1%	+/- 1%	+/- 0.5%	+/- 2%

	TECHNICAL SPECIFICATION & DATA SHEET FOR CONTROL VALVE WITH ACCESSORIES (PNEUMATICALLY OPERATED)	Specification No.: PE-TS-512-145-H104			
		Rev. No. 00			
		Date :30.12.2024			
SPECIFICATION & DATA SHEET FOR CONTROL VALVE					
A. GENERAL INFORMATION					
1	TAG NUMBER / SERVICE	DRV-15 & DRV-22		HPH-7A/7B NORMAL DRAIN TO DEAERATOR	
2	LOCATION / DUTY	INDOOR		MODULATING	
B. DESIGN CODES & STANDARDS					
3	CODE / STANDARD	REFER SPECIFIC NOTES			
C. TECHNICAL PARAMETERS / DESIGN FEATURES					
4	PIPE SIZE (OD X THK) mm	INLET	273 x 6.35	OUTLET	273 x 12.7
5	PIPE MATERIAL INLET / OUTLET	SA 106 GR B		SA 106 GR B	
6	VALVE BODY TYPE / MATERIAL / SIZE OF VALVE	GLOBE	A217WC6	BIDDER TO FURNISH	
7	GUIDING / NO. OF PORTS / TRIM FORM	CAGE	ONE	LINEAR	
8	CAGE TYPE / CAGE MATERIAL / GUIDE BUSH Material	STANDARD	17-4PH SS	17-4PH SS	
9	MATERIAL: PLUG / STEM/SEAT/YOKE	17-4PH SS	17-4PH SS	17-4PH SS	CARBON STEEL
10	PACKING MATERIAL / NOS / TYPE	GRAFOIL	SINGLE	STANDARD	
11	END CONNECTION / ANSI RATING / BONNET TYPE	BWE	BIDDER TO FURNISH	STANDARD	
12	FLOW ACTION / VALVE OUTLET VELOCITY	< 7 M/SEC(WATER)			
13	LEAKAGE CLASS / NOISE LEVEL (dBA)	IV		< 85 dBA	
14	VACUUM SERVICE / ANTI CAVITATION TRIM	NO		NO	
15	ACTUATOR TYPE	PNEUMATIC			
16	TRAVEL TIME FOR OPEN TO CLOSE, CLOSE TO OPEN	LESS THAN 10 SEC			
17	VALVE POSN. ON: ELECTRICAL SIGNAL FAILURE / SUPPLY AIR FAILURE	TO CLOSE		TO CLOSE	
18	SMART POSITIONER / POSITION LIMIT SWITCH	REQUIRED(PROFIBUS)		NOT REQUIRED	
19	POSITION TRANSMITTER / E/P CONVERTER	PART OF SMART POSITIONER		PART OF SMART POSITIONER	
20	AIR FILTER REGULATOR / AIR LOCK RELAY	REQUIRED		NOT REQUIRED	
21	SOLENOID VALVE / JUNCTION BOX	REQUIRED		REQUIRED	
22	HAND WHEEL (SIDE MOUNTED) / LOCAL POSITIONER INDICATOR	REQUIRED		REQUIRED	
23	SERVICE CONDITIONS (LOAD)	FLOW (T/HR)	INLET PR KG/CM2(A)	OUTLET PR. KG/CM2(A)	TEMP DEG. C
24	40% LOAD	79.65	9.2	6.3	163.2
25	60% LOAD	126.9	13.8	8.3	176
26	100%LOAD	265.6	23.3	12.2	198.1
27	VWO	290	24.8	12.8	200.9
28	20%LOAD	46.2	3.7	4	142.4
29	MAX SHUT OFF PRESSURE,BODY DESIGN PRESSURE (KG/CM2 (g)), TEMP (DEG C)	32		32	205
30	IBR FORM-IIIC	NOT REQUIRED			
31	PROCESS CONDITION	FLASHING			
32	MODEL OF CONTROL VALVE	BIDDER TO FURNISH			
33	SIZE OF CONTROL VALVE	BIDDER TO FURNISH			
D. GUARENTEED PERFORMANCE REQUIREMENTS					
34	LINEARITY / HYSTERISIS / SENSITIVITY / OVERALL ACCURACY	+/- 1%	+/- 1%	+/- 0.5%	+/- 2%

	TECHNICAL SPECIFICATION & DATA SHEET FOR CONTROL VALVE WITH ACCESSORIES (PNEUMATICALLY OPERATED)	Specification No.: PE-TS-512-145-H104			
		Rev. No. 00			
		Date :30.12.2024			
SPECIFICATION & DATA SHEET FOR CONTROL VALVE					
A. GENERAL INFORMATION					
1	TAG NUMBER / SERVICE	DRV-18 & DRV-25		HPH-7A/7B ALT. DRAIN TO F/T	
2	LOCATION / DUTY	INDOOR		MODULATING	
B. DESIGN CODES & STANDARDS					
3	CODE / STANDARD	REFER SPECIFIC NOTES			
C. TECHNICAL PARAMETERS / DESIGN FEATURES					
4	PIPE SIZE (OD X THK) mm	INLET	273 x 6.35	OUTLET	323.9 x 12.7
5	PIPE MATERIAL INLET / OUTLET	SA 106 GR B		SA 106 GR B	
6	VALVE BODY TYPE / MATERIAL / SIZE OF VALVE	GLOBE	A217WC9	BIDDER TO FURNISH	
7	GUIDING / NO. OF PORTS / TRIM FORM	CAGE	ONE	LINEAR	
8	CAGE TYPE / CAGE MATERIAL / GUIDE BUSH Material	STANDARD	440C	440C	
9	MATERIAL: PLUG / STEM/SEAT/YOKE	440C	440C	440C	CARBON STEEL
10	PACKING MATERIAL / NOS / TYPE	GRAFOIL	DOUBLE	V-CHEVRON	
11	END CONNECTION / ANSI RATING / BONNET TYPE	BWE	BIDDER TO FURNISH	STANDARD	
12	FLOW ACTION / VALVE OUTLET VELOCITY	< 7 M/SEC(WATER)			
13	LEAKAGE CLASS / NOISE LEVEL (dBA)	V		< 85 dBA	
14	VACUUM SERVICE / ANTI CAVITATION TRIM	YES		NO	
15	ACTUATOR TYPE	PNEUMATIC			
16	TRAVEL TIME FOR OPEN TO CLOSE, CLOSE TO OPEN	LESS THAN 10 SEC			
17	VALVE POSN. ON: ELECTRICAL SIGNAL FAILURE / SUPPLY AIR FAILURE	TO OPEN		TO OPEN	
18	SMART POSITIONER / POSITION LIMIT SWITCH	REQUIRED(HART)		NOT REQUIRED	
19	POSITION TRANSMITTER / E/P CONVERTER	PART OF SMART POSITIONER		PART OF SMART POSITIONER	
20	AIR FILTER REGULATOR / AIR LOCK RELAY	REQUIRED		NOT REQUIRED	
21	SOLENOID VALVE / JUNCTION BOX	REQUIRED		REQUIRED	
22	HAND WHEEL (SIDE MOUNTED) / LOCAL POSITIONER INDICATOR	REQUIRED		REQUIRED	
23	SERVICE CONDITIONS (LOAD)	FLOW (T/HR)	INLET PR KG/CM2(A)	OUTLET PR. KG/CM2(A)	TEMP DEG. C
24	40% LOAD	79.65	11.6	0.2	184.3
25	60% LOAD	126.9	16.2	0.2	200.6
26	100%LOAD	265.6	25.9	0.2	224.6
27	VWO	290	27.3	0.2	227.6
28	20%LOAD	46.2	6.5	0.2	160.8
29	MAX SHUT OFF PRESSURE,BODY DESIGN PRESSURE (KG/CM2 (g)), TEMP (DEG C)	32		32/VACCUM	230
30	IBR FORM-IIIC	NOT REQUIRED			
31	PROCESS CONDITION	FLASHING,HIGH DP			
32	MODEL OF CONTROL VALVE	BIDDER TO FURNISH			
33	SIZE OF CONTROL VALVE	BIDDER TO FURNISH			
D. GUARENTEED PERFORMANCE REQUIREMENTS					
34	LINEARITY / HYSTERISIS / SENSITIVITY / OVERALL ACCURACY	+/- 1%	+/- 1%	+/- 0.5%	+/- 2%

	TECHNICAL SPECIFICATION & DATA SHEET FOR CONTROL VALVE WITH ACCESSORIES (PNEUMATICALLY OPERATED)	Specification No.: PE-TS-512-145-H104			
		Rev. No. 00			
		Date :30.12.2024			
SPECIFICATION & DATA SHEET FOR CONTROL VALVE					
A. GENERAL INFORMATION					
1	TAG NUMBER / SERVICE	DRV-82		LPH-5 NORMAL DRAIN TO LPH-4	
2	LOCATION / DUTY	INDOOR		MODULATING	
B. DESIGN CODES & STANDARDS					
3	CODE / STANDARD	REFER SPECIFIC NOTES			
C. TECHNICAL PARAMETERS / DESIGN FEATURES					
4	PIPE SIZE (OD X THK) mm	INLET	168.3 x 7.11	OUTLET	219.1 x 12.7
5	PIPE MATERIAL INLET / OUTLET	SA 106 GR B		SA 106 GR B	
6	VALVE BODY TYPE / MATERIAL / SIZE OF VALVE	GLOBE	A217WC6	BIDDER TO FURNISH	
7	GUIDING / NO. OF PORTS / TRIM FORM	CAGE	ONE	LINEAR	
8	CAGE TYPE / CAGE MATERIAL / GUIDE BUSH Material	STANDARD	17-4PH SS	17-4PH SS	
9	MATERIAL: PLUG / STEM/SEAT/YOKE	17-4PH SS	17-4PH SS	17-4PH SS	CARBON STEEL
10	PACKING MATERIAL / NOS / TYPE	GRAFOIL	DOUBLE	V-CHEVRON	
11	END CONNECTION / ANSI RATING / BONNET TYPE	BWE	BIDDER TO FURNISH	STANDARD	
12	FLOW ACTION / VALVE OUTLET VELOCITY	< 7 M/SEC(WATER)			
13	LEAKAGE CLASS / NOISE LEVEL (dBA)	IV		< 85 dBA	
14	VACUUM SERVICE / ANTI CAVITATION TRIM	YES		NO	
15	ACTUATOR TYPE	PNEUMATIC			
16	TRAVEL TIME FOR OPEN TO CLOSE, CLOSE TO OPEN	LESS THAN 10 SEC			
17	VALVE POSN. ON: ELECTRICAL SIGNAL FAILURE / SUPPLY AIR FAILURE	TO CLOSE		TO CLOSE	
18	SMART POSITIONER / POSITION LIMIT SWITCH	REQUIRED(PROFIBUS)		NOT REQUIRED	
19	POSITION TRANSMITTER / E/P CONVERTER	PART OF SMART POSITIONER		PART OF SMART POSITIONER	
20	AIR FILTER REGULATOR / AIR LOCK RELAY	REQUIRED		NOT REQUIRED	
21	SOLENOID VALVE / JUNCTION BOX	REQUIRED		REQUIRED	
22	HAND WHEEL (SIDE MOUNTED) / LOCAL POSITIONER INDICATOR	REQUIRED		REQUIRED	
23	SERVICE CONDITIONS (LOAD)	FLOW (T/HR)	INLET PR KG/CM2(A)	OUTLET PR. KG/CM2(A)	TEMP DEG. C
24	40% LOAD	26.54	2.7	1.6	111.4
25	60% LOAD	39.3	3.6	2.3	120.8
26	100%LOAD	74.41	5.3	3.3	135.3
27	VWO	80.25	5.5	3.5	136.6
28	20%LOAD	15.98	1.3	1.2	96.9
29	MAX SHUT OFF PRESSURE,BODY DESIGN PRESSURE (KG/CM2 (g)), TEMP (DEG C)	7		7	145
30	IBR FORM-IIIC	NOT REQUIRED			
31	PROCESS CONDITION	FLASHING			
32	MODEL OF CONTROL VALVE	BIDDER TO FURNISH			
33	SIZE OF CONTROL VALVE	BIDDER TO FURNISH			
D. GUARENTEED PERFORMANCE REQUIREMENTS					
34	LINEARITY / HYSTERISIS / SENSITIVITY / OVERALL ACCURACY	+/- 1%	+/- 1%	+/- 0.5%	+/- 2%

	TECHNICAL SPECIFICATION & DATA SHEET FOR CONTROL VALVE WITH ACCESSORIES (PNEUMATICALLY OPERATED)	Specification No.: PE-TS-512-145-H104			
		Rev. No. 00			
		Date :30.12.2024			
SPECIFICATION & DATA SHEET FOR CONTROL VALVE					
A. GENERAL INFORMATION					
1	TAG NUMBER / SERVICE	DRV-85		LPH-5 ALT. DRAIN TO F/T	
2	LOCATION / DUTY	INDOOR		MODULATING	
B. DESIGN CODES & STANDARDS					
3	CODE / STANDARD	REFER SPECIFIC NOTES			
C. TECHNICAL PARAMETERS / DESIGN FEATURES					
4	PIPE SIZE (OD X THK) mm	INLET	168.3 x 7.11	OUTLET	219.1 x 12.7
5	PIPE MATERIAL INLET / OUTLET	SA 106 GR B		SA 106 GR B	
6	VALVE BODY TYPE / MATERIAL / SIZE OF VALVE	GLOBE	A217WC9	BIDDER TO FURNISH	
7	GUIDING / NO. OF PORTS / TRIM FORM	CAGE	ONE	LINEAR	
8	CAGE TYPE / CAGE MATERIAL / GUIDE BUSH Material	STANDARD	440C	440C	
9	MATERIAL: PLUG / STEM/SEAT/YOKE	440C	440C	440C	CARBON STEEL
10	PACKING MATERIAL / NOS / TYPE	GRAFOIL	DOUBLE	V-CHEVRON	
11	END CONNECTION / ANSI RATING / BONNET TYPE	BWE	BIDDER TO FURNISH	STANDARD	
12	FLOW ACTION / VALVE OUTLET VELOCITY	< 7 M/SEC(WATER)			
13	LEAKAGE CLASS / NOISE LEVEL (dBA)	V		< 85 dBA	
14	VACUUM SERVICE / ANTI CAVITATION TRIM	YES		NO	
15	ACTUATOR TYPE	PNEUMATIC			
16	TRAVEL TIME FOR OPEN TO CLOSE, CLOSE TO OPEN	LESS THAN 10 SEC			
17	VALVE POSN. ON: ELECTRICAL SIGNAL FAILURE / SUPPLY AIR FAILURE	TO OPEN		TO OPEN	
18	SMART POSITIONER / POSITION LIMIT SWITCH	REQUIRED(HART)		NOT REQUIRED	
19	POSITION TRANSMITTER / E/P CONVERTER	PART OF SMART POSITIONER		PART OF SMART POSITIONER	
20	AIR FILTER REGULATOR / AIR LOCK RELAY	REQUIRED		NOT REQUIRED	
21	SOLENOID VALVE / JUNCTION BOX	REQUIRED		REQUIRED	
22	HAND WHEEL (SIDE MOUNTED) / LOCAL POSITIONER INDICATOR	REQUIRED		REQUIRED	
23	SERVICE CONDITIONS (LOAD)	FLOW (T/HR)	INLET PR KG/CM2(A)	OUTLET PR. KG/CM2(A)	TEMP DEG. C
24	40% LOAD	26.54	2.7	0.2	129.1
25	60% LOAD	39.3	3.6	0.2	139.7
26	100%LOAD	74.41	5.3	0.2	155.1
27	VWO	80.25	5.5	0.2	157.1
28	20%LOAD	15.98	1.3	0.2	112.9
31	MAX SHUT OFF PRESSURE,BODY DESIGN PRESSURE (KG/CM2 (g)), TEMP (DEG C)	7		7 /VACCUM	165
32	IBR FORM-IIIC	NOT REQUIRED			
33	PROCESS CONDITION	FLASHING			
34	MODEL OF CONTROL VALVE	BIDDER TO FURNISH			
35	SIZE OF CONTROL VALVE	BIDDER TO FURNISH			
D. GUARENTEED PERFORMANCE REQUIREMENTS					
36	LINEARITY / HYSTERISIS / SENSITIVITY / OVERALL ACCURACY	+/- 1%	+/- 1%	+/- 0.5%	+/- 2%

	TECHNICAL SPECIFICATION & DATA SHEET FOR CONTROL VALVE WITH ACCESSORIES (PNEUMATICALLY OPERATED)	Specification No.: PE-TS-512-145-H104			
		Rev. No. 00			
		Date :30.12.2024			
SPECIFICATION & DATA SHEET FOR CONTROL VALVE					
A. GENERAL INFORMATION					
1	TAG NUMBER / SERVICE	DRV-65		LPH-4 NORMAL DRAIN TO LPH-3	
2	LOCATION / DUTY	INDOOR		MODULATING	
B. DESIGN CODES & STANDARDS					
3	CODE / STANDARD	REFER SPECIFIC NOTES			
C. TECHNICAL PARAMETERS / DESIGN FEATURES					
4	PIPE SIZE (OD X THK) mm INLET / OUTLET	INLET	219.1 x 6.35	OUTLET	219.1 x 12.7
5	PIPE MATERIAL INLET / OUTLET	SA 106 GR B		SA 106 GR B	
6	VALVE BODY TYPE / MATERIAL / SIZE OF VALVE	GLOBE	A217WC6	BIDDER TO FURNISH	
7	GUIDING / NO. OF PORTS / TRIM FORM	CAGE	ONE	LINEAR	
8	CAGE TYPE / CAGE MATERIAL / GUIDE BUSH Material	STANDARD	17-4PH SS	17-4PH SS	
9	MATERIAL: PLUG / STEM/SEAT/YOKE	17-4PH SS	17-4PH SS	17-4PH SS	CARBON STEEL
10	PACKING MATERIAL / NOS / TYPE	GRAFOIL	DOUBLE	V-CHEVRON	
11	END CONNECTION / ANSI RATING / BONNET TYPE	BWE	BIDDER TO FURNISH	STANDARD	
12	FLOW ACTION / VALVE OUTLET VELOCITY	< 7 M/SEC(WATER)			
13	LEAKAGE CLASS / NOISE LEVEL (dBA)	IV		< 85 dBA	
14	VACUUM SERVICE / ANTI CAVITATION TRIM	YES		NO	
15	ACTUATOR TYPE	PNEUMATIC			
16	TRAVEL TIME FOR OPEN TO CLOSE, CLOSE TO OPEN	LESS THAN 10 SEC			
17	VALVE POSN. ON: ELECTRICAL SIGNAL FAILURE / SUPPLY AIR FAILURE	TO CLOSE		TO CLOSE	
18	SMART POSITIONER / POSITION LIMIT SWITCH	REQUIRED(PROFIBUS)		NOT REQUIRED	
19	POSITION TRANSMITTER / E/P CONVERTER	PART OF SMART POSITIONER		PART OF SMART POSITIONER	
20	AIR FILTER REGULATOR / AIR LOCK RELAY	REQUIRED		NOT REQUIRED	
21	SOLENOID VALVE / JUNCTION BOX	REQUIRED		REQUIRED	
22	HAND WHEEL (SIDE MOUNTED) / LOCAL POSITIONER INDICATOR	REQUIRED		REQUIRED	
23	SERVICE CONDITIONS (LOAD)	FLOW (T/HR)	INLET PR KG/CM2(A)	OUTLET PR. KG/CM2(A)	TEMP DEG. C
24	40% LOAD	52.16	1.4	0.8	91.5
25	60% LOAD	76.81	2	1.2	99.7
26	100%LOAD	143.3	2.81	1.6	109.5
27	VWO	154.3	2.86	1.7	113.4
28	20%LOAD	31.2	0.8	0.7	79.5
31	MAX SHUT OFF PRESSURE,BODY DESIGN PRESSURE (KG/CM2 (g)), TEMP (DEG C)	7		7/VACCUM	115
32	IBR FORM-IIIC	NOT REQUIRED			
33	PROCESS CONDITION	FLASHING			
34	MODEL OF CONTROL VALVE	BIDDER TO FURNISH			
35	SIZE OF CONTROL VALVE	BIDDER TO FURNISH			
D. GUARENTEED PERFORMANCE REQUIREMENTS					
36	LINEARITY / HYSTERISIS / SENSITIVITY / OVERALL ACCURACY	+/- 1%	+/- 1%	+/- 0.5%	+/- 2%

	TECHNICAL SPECIFICATION & DATA SHEET FOR CONTROL VALVE WITH ACCESSORIES (PNEUMATICALLY OPERATED)	Specification No.: PE-TS-512-145-H104			
		Rev. No. 00			
		Date :30.12.2024			
SPECIFICATION & DATA SHEET FOR CONTROL VALVE					
A. GENERAL INFORMATION					
1	TAG NUMBER / SERVICE	DRV-68		LPH-4 ALT. DRAIN TO F/T	
2	LOCATION / DUTY	INDOOR		MODULATING	
B. DESIGN CODES & STANDARDS					
3	CODE / STANDARD	REFER SPECIFIC NOTES			
C. TECHNICAL PARAMETERS / DESIGN FEATURES					
4	PIPE SIZE (OD X THK) mm INLET / OUTLET	INLET	219.1 x 6.35	OUTLET	219.1 x 12.7
5	PIPE MATERIAL INLET / OUTLET	SA 106 GR B		SA 106 GR B	
6	VALVE BODY TYPE / MATERIAL / SIZE OF VALVE	GLOBE	A217WC9	BIDDER TO FURNISH	
7	GUIDING / NO. OF PORTS / TRIM FORM	CAGE	ONE	LINEAR	
8	CAGE TYPE / CAGE MATERIAL / GUIDE BUSH Material	STANDARD	440C	440C	
9	MATERIAL: PLUG / STEM/SEAT/YOKE	440C	440C	440C	CARBON STEEL
10	PACKING MATERIAL / NOS / TYPE	GRAFOIL	DOUBLE	V-CHEVRON	
11	END CONNECTION / ANSI RATING / BONNET TYPE	BWE	BIDDER TO FURNISH	STANDARD	
12	FLOW ACTION / VALVE OUTLET VELOCITY	< 7 M/SEC(WATER)			
13	LEAKAGE CLASS / NOISE LEVEL (dBA)	V		< 85 dBA	
14	VACUUM SERVICE / ANTI CAVITATION TRIM	YES		NO	
15	ACTUATOR TYPE	PNEUMATIC			
16	TRAVEL TIME FOR OPEN TO CLOSE, CLOSE TO OPEN	LESS THAN 10 SEC			
17	VALVE POSN. ON: ELECTRICAL SIGNAL FAILURE / SUPPLY AIR FAILURE	TO OPEN		TO OPEN	
18	SMART POSITIONER / POSITION LIMIT SWITCH	REQUIRED(HART)		NOT REQUIRED	
19	POSITION TRANSMITTER / E/P CONVERTER	PART OF SMART POSITIONER		PART OF SMART POSITIONER	
20	AIR FILTER REGULATOR / AIR LOCK RELAY	REQUIRED		NOT REQUIRED	
21	SOLENOID VALVE / JUNCTION BOX	REQUIRED		REQUIRED	
22	HAND WHEEL (SIDE MOUNTED) / LOCAL POSITIONER INDICATOR	REQUIRED		REQUIRED	
23	SERVICE CONDITIONS (LOAD)	FLOW (T/HR)	INLET PR KG/CM2(A)	OUTLET PR. KG/CM2(A)	TEMP DEG. C
24	40% LOAD	52.16	1.4	0.2	91.5
25	60% LOAD	76.81	2	0.2	99.7
26	100%LOAD	143.3	2.81	0.2	109.5
27	VWO	154.3	2.86	0.2	113.4
28	20%LOAD	31.2	0.8	0.2	79.5
31	MAX SHUT OFF PRESSURE,BODY DESIGN PRESSURE (KG/CM2 (g)), TEMP (DEG C)	7		7/VACCUM	140
32	IBR FORM-IIIC	NOT REQUIRED			
33	PROCESS CONDITION	FLASHING			
34	MODEL OF CONTROL VALVE	BIDDER TO FURNISH			
35	SIZE OF CONTROL VALVE	BIDDER TO FURNISH			
D. GUARENTEED PERFORMANCE REQUIREMENTS					
36	LINEARITY / HYSTERISIS / SENSITIVITY / OVERALL ACCURACY	+/- 1%	+/- 1%	+/- 0.5%	+/- 2%

File No. PEM-PG0MM(24)/1/2025-PS-PEM-PGI-1 (Computer No. 134626)
Generated from eOffice by Manoj Bhardwaj, ENGINEER(MB)-PG I-1-PS-PEM, ENGINEER, BHARAT HEAVY ELECTRICAL LTD on 07/01/2025 03:33 pm

	TECHNICAL SPECIFICATION & DATA SHEET FOR CONTROL VALVE WITH ACCESSORIES (PNEUMATICALLY OPERATED)	Specification No.: PE-TS-512-145-H104			
		Rev. No. 00			
		Date :30.12.2024			
SPECIFICATION & DATA SHEET FOR CONTROL VALVE					
A. GENERAL INFORMATION					
1	TAG NUMBER / SERVICE	DRV-77		DRIP PUMP DISCHARGE CONTROL	
2	LOCATION / DUTY	INDOOR		MODULATING	
B. DESIGN CODES & STANDARDS					
3	CODE / STANDARD	REFER SPECIFIC NOTES			
C. TECHNICAL PARAMETERS / DESIGN FEATURES					
4	PIPE SIZE (OD X THK) mm INLET / OUTLET	INLET	219.1 x 12.7	OUTLET	219.1 x 12.7
5	PIPE MATERIAL INLET / OUTLET	SA 106 GR C		SA 106 GR C	
6	VALVE BODY TYPE / MATERIAL / SIZE OF VALVE	GLOBE	A216WCB	BIDDER TO FURNISH	
7	GUIDING / NO. OF PORTS / TRIM FORM	CAGE	ONE	LINEAR	
8	CAGE TYPE / CAGE MATERIAL / GUIDE BUSH Material	STANDARD	SS 316 STELLITED	SS 316 STELLITED	
9	MATERIAL: PLUG / STEM/SEAT/YOKE	SS 316 STELLITED	SS 316 STELLITED	SS 316 STELLITED	CARBON STEEL
10	PACKING MATERIAL / NOS / TYPE	GRAFOIL	DOUBLE	STANDARD	
11	END CONNECTION / ANSI RATING / BONNET TYPE	BWE	BIDDER TO FURNISH	STANDARD	
12	FLOW ACTION / VALVE OUTLET VELOCITY	< 7 M/SEC(WATER)			
13	LEAKAGE CLASS / NOISE LEVEL (dBA)	IV		< 85 dBA	
14	VACUUM SERVICE / ANTI CAVITATION TRIM	NO		NO	
15	ACTUATOR TYPE	PNEUMATIC			
16	TRAVEL TIME FOR OPEN TO CLOSE, CLOSE TO OPEN	LESS THAN 10 SEC			
17	VALVE POSN. ON: ELECTRICAL SIGNAL FAILURE / SUPPLY AIR FAILURE	TO CLOSE		TO CLOSE	
18	SMART POSITIONER / POSITION LIMIT SWITCH	REQUIRED(PROFIBUS)		NOT REQUIRED	
19	POSITION TRANSMITTER / E/P CONVERTER	PART OF SMART POSITIONER		PART OF SMART POSITIONER	
20	AIR FILTER REGULATOR / AIR LOCK RELAY	REQUIRED		NOT REQUIRED	
21	SOLENOID VALVE / JUNCTION BOX	REQUIRED		REQUIRED	
22	HAND WHEEL (SIDE MOUNTED) / LOCAL POSITIONER INDICATOR	REQUIRED		REQUIRED	
23	SERVICE CONDITIONS (LOAD)	FLOW (T/HR)	INLET PR KG/CM2(A)	OUTLET PR. KG/CM2(A)	TEMP DEG. C
24	40% LOAD	82.2	26.7	10	90
25	60% LOAD	120.5	26.6	12.5	97.7
26	100% LOAD	222.1	25.4	18.3	109.2
27	VWO	238.8	24.9	19.3	110.7
28	20% LOAD	49.3	26.6	7.2	78.4
31	MAX SHUT OFF PRESSURE,BODY DESIGN PRESSURE (KG/CM2 (g)), TEMP (DEG C)	45		45	130
32	IBR FORM-IIIC	NOT REQUIRED			
33	PROCESS CONDITION	--			
34	MODEL OF CONTROL VALVE	BIDDER TO FURNISH			
35	SIZE OF CONTROL VALVE	BIDDER TO FURNISH			
D. GUARENTEED PERFORMANCE REQUIREMENTS					
36	LINEARITY / HYSTERISIS / SENSITIVITY / OVERALL ACCURACY	+/- 1%	+/- 1%	+/- 0.5%	+/- 2%

	TECHNICAL SPECIFICATION & DATA SHEET FOR CONTROL VALVE WITH ACCESSORIES (PNEUMATICALLY OPERATED)	Specification No.: PE-TS-512-145-H104			
		Rev. No. 00			
		Date :30.12.2024			
SPECIFICATION & DATA SHEET FOR CONTROL VALVE					
A. GENERAL INFORMATION					
1	TAG NUMBER / SERVICE	DRV-31		LPH-3 ALT. DRAIN TO F/T	
2	LOCATION / DUTY	INDOOR		MODULATING	
B. DESIGN CODES & STANDARDS					
3	CODE / STANDARD	REFER SPECIFIC NOTES			
C. TECHNICAL PARAMETERS / DESIGN FEATURES					
4	PIPE SIZE (OD X THK) mm INLET / OUTLET	INLET	273 x 6.35	OUTLET	323.9 x 12.7
5	PIPE MATERIAL INLET / OUTLET	SA 106 GR B		SA 106 GR B	
6	VALVE BODY TYPE / MATERIAL / SIZE OF VALVE	GLOBE	A217WC9	BIDDER TO FURNISH	
7	GUIDING / NO. OF PORTS / TRIM FORM	CAGE	ONE	LINEAR	
8	CAGE TYPE / CAGE MATERIAL / GUIDE BUSH Material	STANDARD	440C	440C	
9	MATERIAL: PLUG / STEM/SEAT/YOKE	440C	440C	440C	CARBON STEEL
10	PACKING MATERIAL / NOS / TYPE	GRAFOIL	DOUBLE	V-CHEVRON	
11	END CONNECTION / ANSI RATING / BONNET TYPE	BWE	BIDDER TO FURNISH	STANDARD	
12	FLOW ACTION / VALVE OUTLET VELOCITY	< 7 M/SEC(WATER)			
13	LEAKAGE CLASS / NOISE LEVEL (dBA)	V		< 85 dBA	
14	VACUUM SERVICE / ANTI CAVITATION TRIM	YES		NO	
15	ACTUATOR TYPE	PNEUMATIC			
16	TRAVEL TIME FOR OPEN TO CLOSE, CLOSE TO OPEN	LESS THAN 10 SEC			
17	VALVE POSN. ON: ELECTRICAL SIGNAL FAILURE / SUPPLY AIR FAILURE	TO OPEN		TO OPEN	
18	SMART POSITIONER / POSITION LIMIT SWITCH	REQUIRED(HART)		NOT REQUIRED	
19	POSITION TRANSMITTER / E/P CONVERTER	PART OF SMART POSITIONER		PART OF SMART POSITIONER	
20	AIR FILTER REGULATOR / AIR LOCK RELAY	REQUIRED		NOT REQUIRED	
21	SOLENOID VALVE / JUNCTION BOX	REQUIRED		REQUIRED	
22	HAND WHEEL (SIDE MOUNTED) / LOCAL POSITIONER INDICATOR	REQUIRED		REQUIRED	
23	SERVICE CONDITIONS (LOAD)	FLOW (T/HR)	INLET PR KG/CM2(A)	OUTLET PR. KG/CM2(A)	TEMP DEG. C
24	40% LOAD	82.2	0.7	0.2	90
25	60% LOAD	120.5	0.9	0.2	97.7
26	100%LOAD	222.1	1.3	0.2	109.2
27	VWO	238.8	1.3	0.2	110.7
28	20%LOAD	49.3	0.4	0.2	78.4
31	MAX SHUT OFF PRESSURE,BODY DESIGN PRESSURE (KG/CM2 (g)), TEMP (DEG C)	3.5		3.5/VACUUM	115
32	IBR FORM-IIIC	NOT REQUIRED			
33	PROCESS CONDITION	FLASHING			
34	MODEL OF CONTROL VALVE	BIDDER TO FURNISH			
35	SIZE OF CONTROL VALVE	BIDDER TO FURNISH			
D. GUARENTEED PERFORMANCE REQUIREMENTS					
36	LINEARITY / HYSTERISIS / SENSITIVITY / OVERALL ACCURACY	+/- 1%	+/- 1%	+/- 0.5%	+/- 2%

	TECHNICAL SPECIFICATION & DATA SHEET FOR CONTROL VALVE WITH ACCESSORIES (PNEUMATICALLY OPERATED)	Specification No.: PE-TS-512-145-H104			
		Rev. No. 00			
		Date :30.12.2024			
SPECIFICATION & DATA SHEET FOR CONTROL VALVE					
A. GENERAL INFORMATION					
1	TAG NUMBER / SERVICE	DRV-48		DEAERATOR OVERFLOW TO F/T	
2	LOCATION / DUTY	INDOOR		ON/OFF	
B. DESIGN CODES & STANDARDS					
3	CODE / STANDARD	REFER SPECIFIC NOTES			
C. TECHNICAL PARAMETERS / DESIGN FEATURES					
4	PIPE SIZE (OD X THK) mm INLET / OUTLET	INLET	219.1 x 6.35	OUTLET	323.9 x 9.53
5	PIPE MATERIAL INLET / OUTLET	SA 106 GR C		SA 106 GR C	
6	VALVE BODY TYPE / MATERIAL / SIZE OF VALVE	GLOBE	A217WC9	BIDDER TO FURNISH	
7	GUIDING / NO. OF PORTS / TRIM FORM	CAGE	ONE	ON-OFF(QUICK OPEN)	
8	CAGE TYPE / CAGE MATERIAL / GUIDE BUSH Material	STANDARD	440 C	440 C	
9	MATERIAL: PLUG / STEM/SEAT/YOKE	440 C	440 C	440 C	CARBON STEEL
10	PACKING MATERIAL / NOS / TYPE	GRAFOIL	DOUBLE	V-CHEVRON	
11	END CONNECTION / ANSI RATING / BONNET TYPE	BWE	BIDDER TO FURNISH	STANDARD	
12	FLOW ACTION / VALVE OUTLET VELOCITY	< 7 M/SEC(WATER)			
13	LEAKAGE CLASS / NOISE LEVEL (dBA)	V		< 85 dBA	
14	VACUUM SERVICE / ANTI CAVITATION TRIM	YES		NO	
15	ACTUATOR TYPE	PNEUMATIC			
16	TRAVEL TIME FOR OPEN TO CLOSE, CLOSE TO OPEN	LESS THAN 10 SEC			
17	VALVE POSN. ON: ELECTRICAL SIGNAL FAILURE / SUPPLY AIR FAILURE	TO OPEN		STAYPUT	
18	SMART POSITIONER / POSITION LIMIT SWITCH	NOT REQUIRED		REQUIRED	
19	POSITION TRANSMITTER / E/P CONVERTER	NOT REQUIRED		NOT REQUIRED	
20	AIR FILTER REGULATOR / AIR LOCK RELAY	REQUIRED		REQUIRED	
21	SOLENOID VALVE / JUNCTION BOX	REQUIRED		REQUIRED	
22	HAND WHEEL (SIDE MOUNTED) / LOCAL POSITIONER INDICATOR	REQUIRED		REQUIRED	
23	SERVICE CONDITIONS (LOAD)	FLOW (T/HR)	INLET PR KG/CM2(A)	OUTLET PR. KG/CM2(A)	TEMP DEG. C
24	MAX.-1 10% BMCR	256	14.93	0.26	190.3
25	MAX.-2 10% BMCR	256	5.7	0.26	138.2
26	MAX SHUT OFF PRESSURE,BODY DESIGN PRESSURE (KG/CM2 (g)), TEMP (DEG C)	20		20/VACUUM	200
27	IBR FORM-IIIC	NOT REQUIRED			
28	PROCESS CONDITION	FLASHING			
29	MODEL OF CONTROL VALVE	BIDDER TO FURNISH			
30	SIZE OF CONTROL VALVE	BIDDER TO FURNISH			
D. GUARENTEED PERFORMANCE REQUIREMENTS					
31	LINEARITY / HYSTERISIS / SENSITIVITY / OVERALL ACCURACY	NA	NA	NA	NA

File No. PEM-PG0MM(24)/1/2025-PS-PEM-PGI-1 (Computer No. 134626)
Generated from eOffice by Manoj Bhardwaj, ENGINEER(MB)-PG I-1-PS-PEM, ENGINEER, BHARAT HEAVY ELECTRICAL LTD on 07/01/2025 03:33 pm

	TECHNICAL SPECIFICATION & DATA SHEET FOR CONTROL VALVE WITH ACCESSORIES (PNEUMATICALLY OPERATED)	Specification No.: PE-TS-512-145-H104			
		Rev. No. 00			
		Date :30.12.2024			
SPECIFICATION & DATA SHEET FOR CONTROL VALVE					
A. GENERAL INFORMATION					
1	TAG NUMBER / SERVICE	DMV-43		NORMAL DM MU TO HOTWELL	
2	LOCATION / DUTY	INDOOR		MODULATING	
B. DESIGN CODES & STANDARDS					
3	CODE / STANDARD	REFER SPECIFIC NOTES			
C. TECHNICAL PARAMETERS / DESIGN FEATURES					
4	PIPE SIZE (OD X THK) mm INLET / OUTLET	INLET	168.3 X 3.4	OUTLET	168.3 X 3.4
5	PIPE MATERIAL INLET / OUTLET	SA 312 TP 304 (ERW)		SA 312 TP 304 (ERW)	
6	VALVE BODY TYPE / MATERIAL / SIZE OF VALVE	GLOBE	A351CF8M	BIDDER TO FURNISH	
7	GUIDING / NO. OF PORTS / TRIM FORM	CAGE	ONE	EQ %	
8	CAGE TYPE / CAGE MATERIAL / GUIDE BUSH Material	STANDARD	SS316	SS316	
9	MATERIAL: PLUG / STEM/SEAT/YOKE	SS316	SS316	SS316	CARBON STEEL
10	PACKING MATERIAL / NOS / TYPE	GRAFOIL	DOUBLE	V-CHEVRON	
11	END CONNECTION / ANSI RATING / BONNET TYPE	BWE	BIDDER TO FURNISH	STANDARD	
12	FLOW ACTION / VALVE OUTLET VELOCITY	PNEUMATIC			
13	LEAKAGE CLASS / NOISE LEVEL (dBA)	V		< 85 dBA	
14	VACUUM SERVICE / ANTI CAVITATION TRIM	YES		NO	
15	ACTUATOR TYPE	PNEUMATIC WITH SMART POSITIONER (HART)			
16	TRAVEL TIME FOR OPEN TO CLOSE, CLOSE TO OPEN	LESS THAN 10 SEC			
17	VALVE POSN. ON: ELECTRICAL SIGNAL FAILURE / SUPPLY AIR FAILURE	TO OPEN		STAYPUT	
18	SMART POSITIONER / POSITION LIMIT SWITCH	REQUIRED(HART)		NOT REQUIRED	
19	POSITION TRANSMITTER / E/P CONVERTER	PART OF SMART POSITIONER		PART OF SMART POSITIONER	
20	AIR FILTER REGULATOR / AIR LOCK RELAY	REQUIRED		REQUIRED	
21	SOLENOID VALVE / JUNCTION BOX	NOT REQUIRED		REQUIRED	
22	HAND WHEEL (SIDE MOUNTED) / LOCAL POSITIONER INDICATOR	REQUIRED		REQUIRED	
23	SERVICE CONDITIONS (LOAD)	FLOW (T/HR)	INLET PR KG/CM2(A)	OUTLET PR. KG/CM2(A)	TEMP DEG. C
24	MIN(0.5% MU)	12.8	8.2	0.9	33
25	1% MU	25.6	6.3	1.1	33
26	NORMAL(3% MU)	76.8	4.5	1.3	33
27	MAX(.5% MU)	128	3.5	1.6	33
31	MAX SHUT OFF PRESSURE,BODY DESIGN PRESSURE (KG/CM2 (g)), TEMP (DEG C)	12		12/VACUUM	50
32	IBR FORM-IIIC	NOT REQUIRED			
33	PROCESS CONDITION	--			
34	MODEL OF CONTROL VALVE	BIDDER TO FURNISH			
35	SIZE OF CONTROL VALVE	BIDDER TO FURNISH			
D. GUARENTEED PERFORMANCE REQUIREMENTS					
36	LINEARITY / HYSTERISIS / SENSITIVITY / OVERALL ACCURACY	+/- 1%	+/- 1%	+/- 0.5%	+/- 2%

	TECHNICAL SPECIFICATION & DATA SHEET FOR CONTROL VALVE WITH ACCESSORIES (PNEUMATICALLY OPERATED)	Specification No.: PE-TS-512-145-H104			
		Rev. No. 00			
		Date :30.12.2024			
SPECIFICATION & DATA SHEET FOR CONTROL VALVE					
A. GENERAL INFORMATION					
1	TAG NUMBER / SERVICE	DMV-78		EMERGENCY DM MU TO HOTWELL	
2	LOCATION / DUTY	INDOOR		MODULATING	
B. DESIGN CODES & STANDARDS					
3	CODE / STANDARD	REFER SPECIFIC NOTES			
C. TECHNICAL PARAMETERS / DESIGN FEATURES					
4	PIPE SIZE (OD X THK) mm INLET / OUTLET	INLET	219.1 x 3.76	OUTLET	219.1 x 3.76
5	PIPE MATERIAL INLET / OUTLET	SA 312 TP 304 (ERW)		SA 312 TP 304 (ERW)	
6	VALVE BODY TYPE / MATERIAL / SIZE OF VALVE	GLOBE	A351CF8M	BIDDER TO FURNISH	
7	GUIDING / NO. OF PORTS / TRIM FORM	CAGE	ONE	EQ %	
8	CAGE TYPE / CAGE MATERIAL / GUIDE BUSH Material	STANDARD	SS316	SS316	
9	MATERIAL: PLUG / STEM/SEAT/YOKE	SS316	SS316	SS316	CARBON STEEL
10	PACKING MATERIAL / NOS / TYPE	GRAFOIL	DOUBLE	V-CHEVRON	
11	END CONNECTION / ANSI RATING / BONNET TYPE	BWE	BIDDER TO FURNISH	STANDARD	
12	FLOW ACTION / VALVE OUTLET VELOCITY	< 7 M/SEC(WATER)			
13	LEAKAGE CLASS / NOISE LEVEL (dBA)	V		< 85 dBA	
14	VACUUM SERVICE / ANTI CAVITATION TRIM	YES		NO	
15	ACTUATOR TYPE	PNEUMATIC			
16	TRAVEL TIME FOR OPEN TO CLOSE, CLOSE TO OPEN	LESS THAN 10 SEC			
17	VALVE POSN. ON: ELECTRICAL SIGNAL FAILURE / SUPPLY AIR FAILURE	TO CLOSE		STAYPUT	
18	SMART POSITIONER / POSITION LIMIT SWITCH	REQUIRED(HART)		NOT REQUIRED	
19	POSITION TRANSMITTER / E/P CONVERTER	PART OF SMART POSITIONER		PART OF SMART POSITIONER	
20	AIR FILTER REGULATOR / AIR LOCK RELAY	REQUIRED		REQUIRED	
21	SOLENOID VALVE / JUNCTION BOX	NOT REQUIRED		REQUIRED	
22	HAND WHEEL (SIDE MOUNTED) / LOCAL POSITIONER INDICATOR	REQUIRED		REQUIRED	
23	SERVICE CONDITIONS (LOAD)	FLOW (T/HR)	INLET PR KG/CM2(A)	OUTLET PR. KG/CM2(A)	TEMP DEG. C
24	MIN(5% MU)	128	8.5	0.9	33
25	NORMAL(10% MU)	256	7	1.1	33
26	MAX(PUMP CAPACITY)	300	6.5	1.3	33
31	MAX SHUT OFF PRESSURE,BODY DESIGN PRESSURE (KG/CM2 (g)), TEMP (DEG C)	12		12/VACUUM	50
32	IBR FORM-IIIC	NOT REQUIRED			
33	PROCESS CONDITION	--			
34	MODEL OF CONTROL VALVE	BIDDER TO FURNISH			
35	SIZE OF CONTROL VALVE	BIDDER TO FURNISH			
D. GUARENTEED PERFORMANCE REQUIREMENTS					
36	LINEARITY / HYSTERISIS / SENSITIVITY / OVERALL ACCURACY	+/- 1%	+/- 1%	+/- 0.5%	+/- 2%

	TECHNICAL SPECIFICATION & DATA SHEET FOR CONTROL VALVE WITH ACCESSORIES (PNEUMATICALLY OPERATED)	Specification No.: PE-TS-508-145-H104			
		Rev. No. 00			
		Date :30.12.2024			
SPECIFICATION & DATA SHEET FOR CONTROL VALVE					
A. GENERAL INFORMATION					
1	TAG NUMBER / SERVICE	ASV-16		DRAIN OF AUX STEAM FROM EXISTING UNIT HEADER TO UNIT F/T	
2	LOCATION / DUTY	INDOOR		MODULATING	
B. DESIGN CODES & STANDARDS					
3	CODE / STANDARD	REFER SPECIFIC NOTES			
C. TECHNICAL PARAMETERS / DESIGN FEATURES					
4	PIPE SIZE (OD X THK) mm	INLET	60.3 X 5.54	OUTLET	60.3 X 5.54
5	PIPE MATERIAL INLET / OUTLET	SA 106 GR B		SA 106 GR B	
6	VALVE BODY TYPE / MATERIAL/ SIZE OF VALVE	GLOBE	A217WC9	BIDDER TO FURNISH	
7	GUIDING / NO. OF PORTS / TRIM FORM	CAGE	ONE	EQ %	
8	CAGE TYPE / CAGE MATERIAL / GUIDE BUSH Material	LO-DB	SS 316 STELLITED	SS 316 STELLITED	
9	MATERIAL: PLUG / STEM / SEAT / YOKE	SS 316 STELLITED	SS 316 STELLITED	SS 316 STELLITED	CARBON STEEL
10	PACKING MATERIAL / NOS / TYPE	GRAFOIL	DOUBLE	STANDARD	
11	END CONNECTION / ANSI RATING / BONNET TYPE	BWE	BIDDER TO FURNISH	EXTENDED	
12	VALVE OUTLET VELOCITY	< 150 M/SEC(STEAM)			
13	LEAKAGE CLASS / NOISE LEVEL (dBA)	V		< 85 dBA	
14	VACUUM SERVICE / ANTI CAVITATION TRIM	YES		YES	
15	ACTUATOR TYPE	PNEUMATIC			
16	TRAVEL TIME FOR OPEN TO CLOSE, CLOSE TO OPEN	LESS THAN 10 SEC			
17	VALVE POSN. ON: ELECTRICAL SIGNAL FAILURE / SUPPLY AIR FAILURE	TO OPEN		STAYPUT	
18	SMART POSITIONER / POSITION LIMIT SWITCH	REQUIRED(PROFIBUS)		NOT REQUIRED	
19	POSITION TRANSMITTER / E/P CONVERTER	PART OF SMART POSITIONER		PART OF SMART POSITIONER	
20	AIR FILTER REGULATOR / AIR LOCK RELAY	REQUIRED		REQUIRED	
21	SOLENOID VALVE / JUNCTION BOX	NOT REQUIRED		REQUIRED	
22	HAND WHEEL (SIDE MOUNTED) / LOCAL POSITIONER INDICATOR	REQUIRED		REQUIRED	
23	SERVICE CONDITIONS	FLOW (T/HR)	INLET PR KG/CM2(A)	OUTLET PR. KG/CM2(A)	TEMP DEG. C
24	MIN CONDENSATE	4	16	2.2	200
25	MIAX CONDENSATE	10	16	2.2	200
29	MAX SHUT OFF PRESSURE,BODY DESIGN PRESSURE (KG/CM2 (g)) ,TEMP (DEG C)	20			250
30	IBR FORM-IIIC	REQUIRED			
31	PROCESS CONDITION	CAVITATION, HIGH DP			
32	MODEL OF CONTROL VALVE	BIDDER TO FURNISH			
33	SIZE OF CONTROL VALVE	BIDDER TO FURNISH			
D. GUARANTEED PERFORMANCE REQUIREMENTS					
34	LINEARITY / HYSTERISIS / SENSITIVITY / OVERALL ACCURACY	+/- 1%	+/- 1%	+/- 0.5%	+/- 2%

File No. PEM-PG0MM(24)/1/2025-PS-PEM-PGI-1 (Computer No. 134626)
Generated from eOffice by Manoj Bhardwaj, ENGINEER(MB)-PG I-1-PS-PEM, ENGINEER, BHARAT HEAVY ELECTRICAL LTD on 07/01/2025 03:33 pm

	TECHNICAL SPECIFICATION & DATA SHEET FOR CONTROL VALVE WITH ACCESSORIES (PNEUMATICALLY OPERATED)	Specification No.: PE-TS-512-145-H104 Rev. No. 00 Date :30.12.2024			
SPECIFICATION & DATA SHEET FOR CONTROL VALVE					
A. GENERAL INFORMATION					
1	TAG NUMBER / SERVICE	ASV-16A		AUX STEAM FROM EXISTING UNIT	
2	LOCATION / DUTY	INDOOR		MODULATING	
B. DESIGN CODES & STANDARDS					
3	CODE / STANDARD	REFER SPECIFIC NOTES			
C. TECHNICAL PARAMETERS / DESIGN FEATURES					
4	PIPE SIZE (OD X THK) mm	INLET	355.6 X 9.53	OUTLET	355.6 X 9.53
5	PIPE MATERIAL INLET / OUTLET	SA 106 GR B		SA 106 GR B	
6	VALVE BODY TYPE / MATERIAL/ SIZE OF VALVE	GLOBE	A217WC9	BIDDER TO FURNISH	
7	GUIDING / NO. OF PORTS / TRIM FORM	CAGE	ONE	EQ %	
8	CAGE TYPE / CAGE MATERIAL / GUIDE BUSH Material	LO-DB	SS 316 STELLITED	SS 316 STELLITED	
9	MATERIAL: PLUG / STEM / SEAT / YOKE	SS 316 STELLITED	SS 316 STELLITED	SS 316 STELLITED	CARBON STEEL
10	PACKING MATERIAL / NOS / TYPE	GRAFOIL	SINGLE	STANDARD	
11	END CONNECTION / ANSI RATING / BONNET TYPE	BWE	BIDDER TO FURNISH	EXTENDED	
12	VALVE OUTLET VELOCITY	< 150 M/SEC(STEAM)			
13	LEAKAGE CLASS / NOISE LEVEL (dBA)	V		< 85 dBA	
14	VACUUM SERVICE / ANTI CAVITATION TRIM	YES		YES	
15	ACTUATOR TYPE	PNEUMATIC			
16	TRAVEL TIME FOR OPEN TO CLOSE, CLOSE TO OPEN	LESS THAN 10 SEC			
17	VALVE POSN. ON: ELECTRICAL SIGNAL FAILURE / SUPPLY AIR FAILURE	TO OPEN		STAYPUT	
18	SMART POSITIONER / POSITION LIMIT SWITCH	REQUIRED(PROFIBUS)		NOT REQUIRED	
19	POSITION TRANSMITTER / E/P CONVERTER	PART OF SMART POSITIONER		PART OF SMART POSITIONER	
20	AIR FILTER REGULATOR / AIR LOCK RELAY	REQUIRED		REQUIRED	
21	SOLENOID VALVE / JUNCTION BOX	NOT REQUIRED		REQUIRED	
22	HAND WHEEL (SIDE MOUNTED) / LOCAL POSITIONER INDICATOR	REQUIRED		REQUIRED	
23	SERVICE CONDITIONS	FLOW (T/HR)	INLET PR KG/CM2(A)	OUTLET PR. KG/CM2(A)	TEMP DEG. C
24	NORMAL STEAM	40	16	12	310
25	MAX STEAM	60	16	12	310
	CHECK CASE	60	16	14	310
29	MAX SHUT OFF PRESSURE,BODY DESIGN PRESSURE (KG/CM2 (g)) ,TEMP (DEG C)	20			350
30	IBR FORM-IIIC	REQUIRED			
31	PROCESS CONDITION				
32	MODEL OF CONTROL VALVE	BIDDER TO FURNISH			
33	SIZE OF CONTROL VALVE	BIDDER TO FURNISH			
D. GUARANTEED PERFORMANCE REQUIREMENTS					
34	LINEARITY / HYSTERISIS / SENSITIVITY / OVERALL ACCURACY	+/- 1%	+/- 1%	+/- 0.5%	+/- 2%

	TECHNICAL SPECIFICATION & DATA SHEET FOR CONTROL VALVE WITH ACCESSORIES (PNEUMATICALLY OPERATED)	Specification No.: PE-TS-512-145-H104			
		Rev. No. 00			
		Date :30.12.2024			
SPECIFICATION & DATA SHEET FOR CONTROL VALVE					
A. GENERAL INFORMATION					
1	TAG NUMBER / SERVICE	DMCWSG12		DMCW SYSYTEM FOR SG AUX'S	
2	LOCATION / DUTY	INDOOR		MODULATING	
B. DESIGN CODES & STANDARDS					
3	CODE / STANDARD	REFER SPECIFIC NOTES			
C. TECHNICAL PARAMETERS / DESIGN FEATURES					
4	PIPE SIZE (OD X THK) mm INLET / OUTLET	INLET	406.4X6.0	OUTLET	406.4X6.0
5	PIPE MATERIAL INLET / OUTLET	CS IS 2062		CS IS 2062	
6	VALVE BODY TYPE / MATERIAL / SIZE OF VALVE	GLOBE	A216WCB	BIDDER TO FURNISH	
7	GUIDING / NO. OF PORTS / TRIM FORM	CAGE	ONE	LINEAR	
8	CAGE TYPE / CAGE MATERIAL / GUIDE BUSH Material	STANDARD	SS 316 STELLITED	SS 316 STELLITED	
9	MATERIAL: PLUG / STEM/SEAT/YOKE	SS 316 STELLITED	SS 316 STELLITED	SS 316 STELLITED	CARBON STEEL
10	PACKING MATERIAL / NOS / TYPE	GRAFOIL	SINGLE	STANDARD	
11	END CONNECTION / ANSI RATING / BONNET TYPE	BWE	BIDDER TO FURNISH	STANDARD	
12	FLOW ACTION / VALVE OUTLET VELOCITY	< 7 M/SEC(WATER)			
13	LEAKAGE CLASS / NOISE LEVEL (dBA)	IV		< 85 dBA	
14	VACUUM SERVICE / ANTI CAVITATION TRIM	NO		NO	
15	ACTUATOR TYPE	PNEUMATIC			
16	TRAVEL TIME FOR OPEN TO CLOSE, CLOSE TO OPEN	LESS THAN 10 SEC			
17	VALVE POSN. ON: ELECTRICAL SIGNAL FAILURE / SUPPLY AIR FAILURE	TO CLOSE		STAYPUT	
18	SMART POSITIONER / POSITION LIMIT SWITCH	REQUIRED(PROFIBUS)		NOT REQUIRED	
19	POSITION TRANSMITTER / E/P CONVERTER	PART OF SMART POSITIONER		PART OF SMART POSITIONER	
20	AIR FILTER REGULATOR / AIR LOCK RELAY	REQUIRED		REQUIRED	
21	SOLENOID VALVE / JUNCTION BOX	REQUIRED		REQUIRED	
22	HAND WHEEL (SIDE MOUNTED) / LOCAL POSITIONER INDICATOR	REQUIRED		REQUIRED	
23	SERVICE CONDITIONS (LOAD)	FLOW (T/HR)	INLET PR KG/CM2(A)	OUTLET PR. KG/CM2(A)	TEMP DEG. C
24	NORMAL	925	7.3	4.3	38
25	MINIMUM	0	7.3	4.3	38
26	MAX SHUT OFF PRESSURE,BODY DESIGN PRESSURE (KG/CM2 (g)), TEMP (DEG C)	10			60
27	IBR FORM-IIIC				
28	PROCESS CONDITION	--			
29	MODEL OF CONTROL VALVE	BIDDER TO FURNISH			
30	SIZE OF CONTROL VALVE	BIDDER TO FURNISH			
D. GUARENTEED PERFORMANCE REQUIREMENTS					
31	LINEARITY / HYSTERISIS / SENSITIVITY / OVERALL ACCURACY	+/- 1%	+/- 1%	+/- 0.5%	+/- 2%

File No. PEM-PG0MM(24)/1/2025-PS-PEM-PGI-1 (Computer No. 134626)
Generated from eOffice by Manoj Bhardwaj, ENGINEER(MB)-PG I-1-PS-PEM, ENGINEER, BHARAT HEAVY ELECTRICAL LTD on 07/01/2025 03:33 pm

	TECHNICAL SPECIFICATION & DATA SHEET FOR CONTROL VALVE WITH ACCESSORIES (PNEUMATICALLY OPERATED)	Specification No.: PE-TS-512-145-H104			
		Rev. No. 00			
		Date :30.12.2024			
SPECIFICATION & DATA SHEET FOR CONTROL VALVE					
A. GENERAL INFORMATION					
1	TAG NUMBER / SERVICE	DMCW18		DMCW SYSYTEM FOR TG AUX'S	
2	LOCATION / DUTY	INDOOR		MODULATING	
B. DESIGN CODES & STANDARDS					
3	CODE / STANDARD	REFER SPECIFIC NOTES			
C. TECHNICAL PARAMETERS / DESIGN FEATURES					
4	PIPE SIZE (OD X THK) mm INLET / OUTLET	INLET	457X6.0	OUTLET	457X6.0
5	PIPE MATERIAL INLET / OUTLET	CS IS 2062		CS IS 2062	
6	VALVE BODY TYPE / MATERIAL / SIZE OF VALVE	GLOBE	A216WCB	BIDDER TO FURNISH	
7	GUIDING / NO. OF PORTS / TRIM FORM	CAGE	ONE	LINEAR	
8	CAGE TYPE / CAGE MATERIAL / GUIDE BUSH Material	STANDARD	SS 316 STELLITED	SS 316 STELLITED	
9	MATERIAL: PLUG / STEM/SEAT/YOKE	SS 316 STELLITED	SS 316 STELLITED	SS 316 STELLITED	CARBON STEEL
10	PACKING MATERIAL / NOS / TYPE	GRAFOIL	SINGLE	STANDARD	
11	END CONNECTION / ANSI RATING / BONNET TYPE	BWE	BIDDER TO FURNISH	STANDARD	
12	FLOW ACTION / VALVE OUTLET VELOCITY	< 7 M/SEC(WATER)			
13	LEAKAGE CLASS / NOISE LEVEL (dBA)	IV		< 85 dBA	
14	VACUUM SERVICE / ANTI CAVITATION TRIM	NO		NO	
15	ACTUATOR TYPE	PNEUMATIC			
16	TRAVEL TIME FOR OPEN TO CLOSE, CLOSE TO OPEN	LESS THAN 10 SEC			
17	VALVE POSN. ON: ELECTRICAL SIGNAL FAILURE / SUPPLY AIR FAILURE	TO CLOSE		STAYPUT	
18	SMART POSITIONER / POSITION LIMIT SWITCH	REQUIRED(PROFIBUS)		NOT REQUIRED	
19	POSITION TRANSMITTER / E/P CONVERTER	PART OF SMART POSITIONER		PART OF SMART POSITIONER	
20	AIR FILTER REGULATOR / AIR LOCK RELAY	REQUIRED		REQUIRED	
21	SOLENOID VALVE / JUNCTION BOX	REQUIRED		REQUIRED	
22	HAND WHEEL (SIDE MOUNTED) / LOCAL POSITIONER INDICATOR	REQUIRED		REQUIRED	
23	SERVICE CONDITIONS (LOAD)	FLOW (T/HR)	INLET PR KG/CM2(A)	OUTLET PR. KG/CM2(A)	TEMP DEG. C
24	NORMAL	1084	5	2.7	38
25	MIMIMUM	0	5	2.7	38
26	MAX SHUT OFF PRESSURE,BODY DESIGN PRESSURE (KG/CM2 (g)), TEMP (DEG C)	10			60
27	IBR FORM-IIIC				
28	PROCESS CONDITION	--			
29	MODEL OF CONTROL VALVE	BIDDER TO FURNISH			
30	SIZE OF CONTROL VALVE	BIDDER TO FURNISH			
D. GUARENTEED PERFORMANCE REQUIREMENTS					
31	LINEARITY / HYSTERISIS / SENSITIVITY / OVERALL ACCURACY	+/- 1%	+/- 1%	+/- 0.5%	+/- 2%

File No. PEM-PG0MM(24)/1/2025-PS-PEM-PGI-1 (Computer No. 134626)
Generated from eOffice by Manoj Bhardwaj, ENGINEER(MB)-PG I-1-PS-PEM, ENGINEER, BHARAT HEAVY ELECTRICAL LTD on 07/01/2025 03:33 pm

बी एच ई एल BHEL	TECHNICAL SPECIFICATION & DATA SHEET FOR CONTROL VALVE WITH ACCESSORIES (PNEUMATICALLY OPERATED)	Specification No.: PE-TS-512-145-H104			
		Rev. No. 00			
		Date :30.12.2024			

DATA SHEET FOR CONTROL VALVE ACCESSORIES TO BE CONFIRMED BY BIDDER

1	SMART POSITIONER	SMART POSITIONER (HART / PROFIBUS). Refer detailed Specification			
2	AFR CASING MATERIAL / FILTER SIZE / INLET - OUTLET PRESSURE (KG/CM2) / OUTPUT GAUGE	SINTERED BRONZE	5 MICRON	5.0 - 8.0	REQUIRED
3	AIR LOCK INLET-OUTLET PRESSURE (KG/CM2) / AFR AUTO DRAIN FEATURE	5.0 - 8.0		REQUIRED	
4	AIR LOCK RESET TYPE / VENT PLUG	AUTO		REQUIRED	
5	LIMIT SWITCH POSITION NO. / CONTACT TYPE / ENCLOSURE CLASS /CONTACT RATING	4(2-OPEN, 2-CLOSE)	4 X SPDT	IP-65	0.5A,24 V DC / 5A,230 V AC
6	SOV BODY MATERIAL / OPERATION / VOLTAGE / TYPE	BRASS	STAYPUT	24 V DC	3 WAY (UNIVERSAL OPERATION TYPE)
7	SOV COIL INSULATION CLASS / ENCLOSURE CLASS	H		IP-65	
8	JB MATERIAL / NO OF WAYS / ENCLOSURE CLASS	4 mm thick FRP	36	IP-65	
9	JB CABLE GLAND TYPE / MATERIAL / QUANTITY (PER CV) / JB TB TYPE	YES- DOUBLE COMPRESSION TYPE	Ni-PLATED	TWO	CAGE CLAMP
10	HAND WHEEL MOUNTING POSITION / POSITION INDICATOR / LOCAL POSITION INDICATOR	SIDE MOUNTED	REQUIRED	REQUIRED	
11	TUBING (ADDITIONAL TO INTEGRAL TUBING) /MATERIAL / SIZE / LENGTH IN METRES (PER CV)	REQUIRED	SS 316	1/4 "	12
12	FITTINGS AS PER HOOK UP DIAGRAM / FOR CONNECTION TO AIR FILTER REGULATOR	REQUIRED		REQUIRED	
13	FITTINGS FOR CONNECTION TO AIR LOCK RELAY / FOR CONNECTION TO IA HEADER ISOLATION VALVE	REQUIRED		REQUIRED	
14	EQUAL TEEs / CONNECTORS	REQUIRED		REQUIRED	
15	VALVE DIAGNOSTIC AND CONFIGURATION SOFTWARE	REQUIRED		REQUIRED	

File No. PEM-PG0MM(24)/1/2025-PS-PEM-PGI-1 (Computer No. 134626)

Generated from eOffice by Manoj Bhardwaj, ENGINEER(MB)-PG I-1-PS-PEM, ENGINEER, BHARAT HEAVY ELECTRICAL LTD on 07/01/2025 03:33 pm

	MANUFACTURER/BIDDER/ SUPPLIER NAME & ADDRESS	STANDARD QUALITY PLAN		SPEC. NO : --	DATE: --
		CUSTOMER :--		QP NO.: PE-QP-999-145-H 006 REV 00	DATE: 04.01.2024
		PROJECT: --		PO NO.: --	DATE: --
		ITEM: CONTROL VALVE	SYSTEM: S&CE		SHEET 1 OF 8

SL NO.	COMPONENT & OPERATIONS	CHARACTERISTIC CHECKED	CATE GORY	TYPE OF CHECK	QUANTUM OF CHECK		REFERENCE DOCUMENT	ACCEPTANCE NORMS	FORMAT OF RECORD	AGENCY				REMARKS
	2	3	4	5	6		7	8	9	*	**			
					M	B/C				D	M	B	C	
1.0	**RAW MATERIAL**													
1.1	Body & Bonnet castings/forgings ,plug,valve stem, seat ring/cage	Physical, Chemical properties	MA	Physical, Chemical tests	100%	10%	Approved drg/ datasheet	Approved drg/data sheet	Test Certificate	√	P/ W	V		
		Heat Treatment	MA	Review of H.T. Certificate	100%	10%	Approved drg/ datasheet	Approved drg/data sheet	Test Certificate	√	P/ W	V		1. Applicable for body /bonnet only 2. IBR certificate(if applicable) to be verified.
		Internal quality of castings/forgings	MA	RT for Body & UT for Bonnet	100%	10%	ASME B 16.34	ASME B 16.34	Test Report/ Film	√	P/ W	V		Applicable for body and bonnet for rating ANSI 900 and above.
		Surface Quality	MA	1.Visual	100%	10%	ANSI/ MSS-SP-55	ANSI/ MSS-SP-55	Inspection Report	√	P/ W	V		Applicable for body/bonnet only.
		Pressure Test for shell	MA	Hyd. Test	100%	10%	ISA-S-75.19	ISA-S-75.19	Inspection Report	√	P/ W	V		For Body and Bonnet after machining.

BHEL						BIDDER/ SUPPLIER		FOR CUSTOMER REVIEW & APPROVAL			
ENGINEERING			QUALITY			Sign & Date		Doc No:			
	Name	Sign & Date		Name	Sign & Date	Seal			Name	Sign & Date	Seal
Prepared by:	CHETAN MALIK		Checked by:	SUMAN NAKWAL				Reviewed by:			
Reviewed by:	SURESH CHAND SHARMA		Reviewed by:	HARISH KUMAR				Approved by:			
Approved by:	GIRISH BHAGCHANDANI										

File No. PEM-PG0MM(24)/1/2025-PS-PEM-PGI-1 (Computer No. 134626)

Generated from eOffice by Manoj Bhardwaj, ENGINEER(MB)-PG I-1-PS-PEM, ENGINEER, BHARAT HEAVY ELECTRICAL LTD on 07/01/2025 03:33 pm

	MANUFACTURER/BIDDER/ SUPPLIER NAME & ADDRESS	STANDARD QUALITY PLAN		SPEC. NO : --	DATE: --
		CUSTOMER :--		QP NO.: PE-QP-999-145-H 006 REV 00	DATE: 04.01.2024
		PROJECT: --		PO NO.: --	DATE: --
		ITEM: CONTROL VALVE	SYSTEM: S&CE		SHEET 2 OF 8

SL NO.	COMPONENT & OPERATIONS	CHARACTERISTIC CHECKED	CATE GORY	TYPE OF CHECK	QUANTUM OF CHECK		REFERENCE DOCUMENT	ACCEPTANCE NORMS	FORMAT OF RECORD	AGENCY				REMARKS
	2	3	4	5	6		7	8	9	*	**			
					M	B/C				D	M	B	C	
1.2	Diaphragm	Surface Quality	MA	Visual	100%	10%	Mfr. standard	COC./Test Certificate	COC/Test Certificate	√	P/V	V		
		Hardness	MA	Measurement	100%	10%	Mfr. standard	COC/Test Certificate	COC/ Test Certificate	√	P/V	V		
		Endurance/ Life cycle	MA	Cyclic Test 10,000 cycles	One/ type	One/ type	Mfr. standard	No damage	COC/Test Certificate	√	P/V	V		
1.3	Spring	Composition	MA	Chemical-Analysis	One Sample/ Heat	One Sample/ Heat	Mfr. Standard	COC/Test Certificate	COC/Test Certificate	√	P/V	V		
		Mech. Properties	MA	Mech. Test	One Sample/ Heat	One Sample/ Heat	Mfr. Standard	COC/Test Certificate	COC/Test Certificate	√	P/V	V		
		Performance	MA	1.Stiffness Ratio	100%	10%	Mfr. standard	COC/Test Certificate	COC/Test Certificate	√	P/V	V		
				2.Scragging	100%	10%	Mfr. standard	COC/Test Certificate	COC/Test Certificate	√	P/V	V		
				3.Cyclic Test (Endurance)	One/ type	One/ type	Mfr. standard	COC/Test Certificate	COC/Test Certificate	√	P/V	V		

BHEL						BIDDER/ SUPPLIER		FOR CUSTOMER REVIEW & APPROVAL			
ENGINEERING			QUALITY			Sign & Date		Doc No:			
	Name	Sign & Date		Name	Sign & Date	Seal			Name	Sign & Date	Seal
Prepared by:	CHETAN MALIK		Checked by:	SUMAN NAKWAL				Reviewed by:			
Reviewed by:	SURESH CHAND SHARMA		Reviewed by:	HARISH KUMAR				Approved by:			
Approved by:	GIRISH BHAGCHANDANI										

File No. PEM-PG0MM(24)/1/2025-PS-PEM-PGI-1 (Computer No. 134626)

Generated from eOffice by Manoj Bhardwaj, ENGINEER(MB)-PG I-1-PS-PEM, ENGINEER, BHARAT HEAVY ELECTRICAL LTD on 07/01/2025 03:33 pm

	MANUFACTURER/BIDDER/ SUPPLIER NAME & ADDRESS	STANDARD QUALITY PLAN	SPEC. NO : --	DATE: --
		CUSTOMER :--	QP NO.: PE-QP-999-145-H 006 REV 00	DATE: 04.01.2024
		PROJECT: --	PO NO.: --	DATE: --
		ITEM: CONTROL VALVE / SYSTEM: S&CE		SHEET 3 OF 8

SL NO.	COMPONENT & OPERATIONS	CHARACTERISTIC CHECKED	CATE GORY	TYPE OF CHECK	QUANTUM OF CHECK		REFERENCE DOCUMENT	ACCEPTANCE NORMS	FORMAT OF RECORD	AGENCY				REMARKS
	2	3	4	5	6		7	8	9	*	**			
					M	B/C				D	M	B	C	
				4. Dimension (Measurement)	One sample/ Lot	One sample /Lot	Mfr. Standard	COC/Test Certificate	COC/Test Certificate	√	P/ V	V		
2.0	**IN PROCESS INSPECTION**													
2.1	After machining, i, Body ii Bonnet iii Plug iv Valve Stem v seat ring vi cage	Surface flaws	MA	Visual & MT/PT	100% (on accessi ble surfaces)	10%	ASME B 16.34	ASME B 16.34	Inspection Report	√	P/ W	V		Butt weld ends shall be included.
		Dimensional checks	MA	Measurement	100%	10%	Appd Drg.	Appd Drg.	Inspection Report	√	P/ W	V		
		Hard Facing (wherever applicable)	MA	Hardness Measurement	One sample/ Lot	One sample /Lot	Appd Datasheet	Appd Datasheet	Inspection Report	√	P/ W	V		

BHEL						BIDDER/ SUPPLIER		FOR CUSTOMER REVIEW & APPROVAL			
ENGINEERING			QUALITY			Sign & Date		Doc No:			
	Name	Sign & Date		Name	Sign & Date	Seal			Name	Sign & Date	Seal
Prepared by:	CHETAN MALIK		Checked by:	SUMAN NAKWAL				Reviewed by:			
Reviewed by:	SURESH CHAND SHARMA		Reviewed by:	HARISH KUMAR				Approved by:			
Approved by:	GIRISH BHAGCHANDANI										

File No. PEM-PG0MM(24)/1/2025-PS-PEM-PGI-1 (Computer No. 134626)

Generated from eOffice by Manoj Bhardwaj, ENGINEER(MB)-PG I-1-PS-PEM, ENGINEER, BHARAT HEAVY ELECTRICAL LTD on 07/01/2025 03:33 pm

	MANUFACTURER/BIDDER/ SUPPLIER NAME & ADDRESS	STANDARD QUALITY PLAN	SPEC. NO : --	DATE: --
		CUSTOMER :--	QP NO.: PE-QP-999-145-H 006 REV 00	DATE: 04.01.2024
		PROJECT: --	PO NO.: --	DATE: --
		ITEM: CONTROL VALVE / SYSTEM: S&CE		SHEET 4 OF 8

SL NO.	COMPONENT & OPERATIONS	CHARACTERISTIC CHECKED	CATE GORY	TYPE OF CHECK	QUANTUM OF CHECK		REFERENCE DOCUMENT	ACCEPTANCE NORMS	FORMAT OF RECORD	*	**			REMARKS
										D	M	B	C	
	2	3	4	5	6		7	8	9					
					M	B/C								
FINAL TESTING/INSPECTION														
3.0	**TESTS ON COMPLETED VALVE**													
3.1	Actuator Chamber	Leakage	MA	Pneumatic Test	100%	10%	Mfr. standard	No Leakage	Test Certificate	√	P/W	W		
3.2	Body	Leakage (Body Mount Leakage)	MA	Hydro Test	100%	10%	ISA-S-75.19/	No Leakage	Test Certificate	√	P/W	W		
3.3	Seat Leakage	Seat Leakage	MA	Pneumatic / WaterTest	100%	10%	FCI-70.2	Approved Datasheet	Test Certificate	√	P/W	W		
4.0	**OPERATION TEST ON COMPLETED VALVE ASSEMBLY**	Valve Travel	MA	Measurement	100%	10%	Approved datasheet	Approved Datasheet	Inspection Report	√	P/W	W		
		Opening / Closing Time	MA	Measurement	100%	10%	Approved datasheet	Approved Datasheet	Inspection Report	√	P/W	W		
		Linearity / Cam characteristic	MA	Measurement	100%	10%	Approved datasheet	Approved Datasheet	Inspection Report	√	P/W	W		
		Repeatability	MA	Measurement	100%	10%	Approved datasheet	Approved Datasheet	Inspection Report	√	P/W	W		
		Hysterisis	MA	Measurement	100%	10%	Approved datasheet	Approved Datasheet	Inspection Report	√	P/W	W		
		Sensitivity	MA	Measurement	100%	10%	Approved datasheet	Approved Datasheet	Inspection Report	√	P/W	W		

BHEL						BIDDER/ SUPPLIER		FOR CUSTOMER REVIEW & APPROVAL			
ENGINEERING			QUALITY			Sign & Date		Doc No:			
	Name	Sign & Date		Name	Sign & Date	Seal			Name	Sign & Date	Seal
Prepared by:	CHETAN MALIK		Checked by:	SUMAN NAKWAL				Reviewed by:			
Reviewed by:	SURESH CHAND SHARMA		Reviewed by:	HARISH KUMAR				Approved by:			
Approved by:	GIRISH BHAGCHANDANI										

File No. PEM-PG0MM(24)/1/2025-PS-PEM-PGI-1 (Computer No. 134626)

Generated from eOffice by Manoj Bhardwaj, ENGINEER(MB)-PG I-1-PS-PEM, ENGINEER, BHARAT HEAVY ELECTRICAL LTD on 07/01/2025 03:33 pm

	MANUFACTURER/BIDDER/ SUPPLIER NAME & ADDRESS	STANDARD QUALITY PLAN	SPEC. NO : --	DATE: --
		CUSTOMER :--	QP NO.: PE-QP-999-145-H 006 REV 00	DATE: 04.01.2024
		PROJECT: --	PO NO.: --	DATE: --
		ITEM: CONTROL VALVE / SYSTEM: S&CE		SHEET 5 OF 8

SL NO.	COMPONENT & OPERATIONS	CHARACTERISTIC CHECKED	CATE GORY	TYPE OF CHECK	QUANTUM OF CHECK		REFERENCE DOCUMENT	ACCEPTANCE NORMS	FORMAT OF RECORD	AGENCY				REMARKS
	2	3	4	5	6		7	8	9	*	**			
					M	B/C				D	M	B	C	
		Accuracy(Overall)	MA	Measurement	100%	10%	Approved datasheet	Approved Datasheet	Inspection Report					
		Control Valve characteristics / CV Test	MA	Measurement (Press. vs. discharge and discharge vs opening 0-100% in steps of 10%)	One per type	One per type	Mfr. Procedure	Approved Datasheet	Test Certificate	√	P/W	V		
		Operation of limit switch & solenoids and other accessories	MA	Function	100%	10%	Mfr. Procedure	Approved Datasheet	Inspection Report	√	P/W	W		On assembled Valve.
		Overall dimensions	MI	Visual and dimensional	100%	10%	Approved drg	Approved drg	Inspection Report	√	P/W	W		
		Pre-defined valve position in case of air / signal failure	MI	Visual and dimensional	100%	10%	Approved data sheet	Approved data sheet	Inspection Report	√	P/W	W		
		Stamping (for direction of flow), Tag No.	MA	Visual	100%	10%	Approved drg /datasheet	Approved drg /datasheet	Test Certificate	√	P/W	W		

BHEL						BIDDER/ SUPPLIER		FOR CUSTOMER REVIEW & APPROVAL			
ENGINEERING			QUALITY			Sign & Date		Doc No:			
	Name	Sign & Date		Name	Sign & Date	Seal			Name	Sign & Date	Seal
Prepared by:	CHETAN MALIK		Checked by:	SUMAN NAKWAL				Reviewed by:			
Reviewed by:	SURESH CHAND SHARMA		Reviewed by:	HARISH KUMAR				Approved by:			
Approved by:	GIRISH BHAGCHANDANI										

	MANUFACTURER/BIDDER/ SUPPLIER NAME & ADDRESS	STANDARD QUALITY PLAN		SPEC. NO : --	DATE: --
		CUSTOMER :--		QP NO.: PE-QP-999-145-H 006 REV 00	DATE: 04.01.2024
		PROJECT: --		PO NO.: --	DATE: --
		ITEM: CONTROL VALVE	SYSTEM: S&CE		SHEET 6 OF 8

SL NO.	COMPONENT & OPERATIONS	CHARACTERISTIC CHECKED	CATE GORY	TYPE OF CHECK	QUANTUM OF CHECK		REFERENCE DOCUMENT	ACCEPTANCE NORMS	FORMAT OF RECORD	AGENCY				REMARKS
	2	3	4	5	6		7	8	9	*	**			
					M	B/C				D	M	B	C	
5.0	**AUXILIARY ITEMS(Performance test of auxiliary items shall be performed on the completely assembled valve)** – Refer NOTE-3													
5.1	Air Filter Regulator	Performance Test	MA	Measurement	Each type	Each type	Mfr. Standard	No leakage	--	√	P/V	V		
		Overall leakage	MA	Visual(soap solution)	100 %	10%	Mfr. Standard	No leakage	--	√	P/V	V		
5.2	Air lock relay	Performance Test	MA	Leakage test	100%	10%	Mfr. Standard	No leakage	--	√	P/V	V		
5.3	Smart Positioner	Physical Verification Make/Model	MA	Visual	100%	10%	Approved drg/ datasheet	Approved drg/ datasheet	--	√	P/V	V		
		Degree of Protection	MA	IP/NEMA test	Each type	Each type	Relevant Standard	Relevant Standard	--	√	P/V	V		
		Calibration	MA	Measurement	Each type	Each type	Mfr. Standard	Mfr. Standard	--	√	P/V	V		
5.7	**Electrical items** (i) Limit Switches	Routine Test	MA	HV, IR, Continuity function	100%	10%	Approved Data sheet	Approved Data sheet	--	√	P/V	V		
		Degree of protection	MA	IP/NEMA Tests	One sample/ type	One sample/ Lot	Approved Data sheet	Approved Data sheet	--	√	P/V	V		

BHEL						BIDDER/ SUPPLIER		FOR CUSTOMER REVIEW & APPROVAL			
ENGINEERING			QUALITY			Sign & Date		Doc No:			
	Name	Sign & Date		Name	Sign & Date	Seal			Name	Sign & Date	Seal
Prepared by:	CHETAN MALIK		Checked by:	SUMAN NAKWAL				Reviewed by:			
Reviewed by:	SURESH CHAND SHARMA		Reviewed by:	HARISH KUMAR				Approved by:			
Approved by:	GIRISH BHAGCHANDANI										

	MANUFACTURER/BIDDER/ SUPPLIER NAME & ADDRESS	STANDARD QUALITY PLAN		SPEC. NO : --	DATE: --
		CUSTOMER :--		QP NO.: PE-QP-999-145-H 006 REV 00	DATE: 04.01.2024
		PROJECT: --		PO NO.: --	DATE: --
		ITEM: CONTROL VALVE	SYSTEM: S&CE		SHEET 7 OF 8

SL NO.	COMPONENT & OPERATIONS	CHARACTERISTIC CHECKED	CATE GORY	TYPE OF CHECK	QUANTUM OF CHECK		REFERENCE DOCUMENT	ACCEPTANCE NORMS	FORMAT OF RECORD	*	**			REMARKS
	2	3	4	5	6		7	8	9	D	M	B	C	
					M	B/C								
	(ii) Solenoids	Routine Test	MA	HV, IR, Continuity function	100%	10%	Approved Data sheet	Approved Data sheet	--	√	P/V	V		
		Degree of protection	MA	IP/NEMA Tests	One sample/ type	One sample /Lot	Approved Data sheet	Approved Data sheet	--	√	P/V	V		
	(iii)Position Transmitter(if provided externally)	Routine Test	MA	HV, IR, Continuity function	100%	10%	Approved Data sheet	Approved Data sheet	--	√	P/V	V		
		Degree of protection	MA	IP/NEMA Tests	One sample/ type	One sample /Lot	Approved Data sheet	Approved Data sheet	--	√	P/V	V		
6.0	**PAINTING**	Paint Thickness	MA	Measurement DFT check	100%	10%	Approved drg/data sheet	Approved drg/data sheet	Inspection Report	√	P/W	V		
7.0	**PACKING**	Soundness of Packing against transit damage	MA	Visual	100%	100%	Approved drg/data sheet	Approved drg/data sheet	Inspection Report	√	P/W	V		

BHEL						BIDDER/ SUPPLIER		FOR CUSTOMER REVIEW & APPROVAL			
ENGINEERING			QUALITY			Sign & Date		Doc No:			
	Name	Sign & Date		Name	Sign & Date	Seal			Name	Sign & Date	Seal
Prepared by:	CHETAN MALIK		Checked by:	SUMAN NAKWAL				Reviewed by:			
Reviewed by:	SURESH CHAND SHARMA		Reviewed by:	HARISH KUMAR				Approved by:			
Approved by:	GIRISH BHAGCHANDANI										

File No. PEM-PG0MM(24)/1/2025-PS-PEM-PGI-1 (Computer No. 134626)

Generated from eOffice by Manoj Bhardwaj, ENGINEER(MB)-PG I-1-PS-PEM, ENGINEER, BHARAT HEAVY ELECTRICAL LTD on 07/01/2025 03:33 pm

	MANUFACTURER/BIDDER/ SUPPLIER NAME & ADDRESS	STANDARD QUALITY PLAN		SPEC. NO : --	DATE: --
		CUSTOMER :--		QP NO.: PE-QP-999-145-H 006 REV 00	DATE: 04.01.2024
		PROJECT: --		PO NO.: --	DATE: --
		ITEM: CONTROL VALVE	SYSTEM: S&CE		SHEET 8 OF 8

SL NO.	COMPONENT & OPERATIONS	CHARACTERISTIC CHECKED	CATE GORY	TYPE OF CHECK	QUANTUM OF CHECK		REFERENCE DOCUMENT	ACCEPTANCE NORMS	FORMAT OF RECORD		AGENCY			REMARKS
	2	3	4	5	6		7	8	9	*	**			
					M	B/C				D	M	B	C	

NOTES:

1. Cv test shall be conducted at FCRI/ laboratory approved by Govt. Of India/BHEL approved Laboratory. Alternatively, valid Cv test certificate for a similar control valve (same size, same Cv, same trim characteristics) can be accepted.
2. Copies of all TC's (Test Certificates) for materials duly correlated with Heat Nos., TC's for electrical items and mechanical tests(Leak/Operation), C.O.C's (Certificates of Conformance) shall be submitted to BHEL for verification and acceptance.
3. Valve manufacturer to arrange for COC (Certificates of Conformance) for the tests w.r.t. control valve accessories mentioned at Sl. No. 5 of the QAP.

LEGENDS:

*RECORDS, INDENTIFIED WITH "TICK"(√) SHALL BE ESSENTIALLY INCLUDED BY SUPPLIER IN QA DOCUMENTATION,

** **M**:SUPPLIER / MANUFACTURER/ SUB-SUPPLIER/SUB-CONTRACTOR, , **B**: BHEL/ BHEL NOMINATED THIRD PARTY INSPECTION AGENCY, **C**: CUSTOMER, **P**:PERFORM,**W**:WITNESS, **V:**VERIFICATION,AS APPROPRIATE **MA**:MAJOR,**MI**:MINOR,**CR:**CRITICAL,**RT-**RADIOGRAPHIC TEST,**UT-**ULTRASONIC TEST,**PT-**DYE PENETRANT TEST,**MT-**MAGNETIC PARTICLE TEST

BHEL						BIDDER/ SUPPLIER		FOR CUSTOMER REVIEW & APPROVAL			
ENGINEERING			QUALITY			Sign & Date		Doc No:			
	Name	Sign & Date		Name	Sign & Date	Seal			Name	Sign & Date	Seal
Prepared by:	CHETAN MALIK		Checked by:	SUMAN NAKWAL				Reviewed by:			
Reviewed by:	SURESH CHAND SHARMA		Reviewed by:	HARISH KUMAR				Approved by:			
Approved by:	GIRISH BHAGCHANDANI										

File No. PEM-PG0MM(24)/1/2025-PS-PEM-PGI-1 (Computer No. 134626)

Generated from eOffice by Manoj Bhardwaj, ENGINEER(MB)-PG I-1-PS-PEM, ENGINEER, BHARAT HEAVY ELECTRICAL LTD on 07/01/2025 03:33 pm

STANDARD CONTROL VALVE HOOK-UP DIAGRAM (WITH SMART POSITIONER)

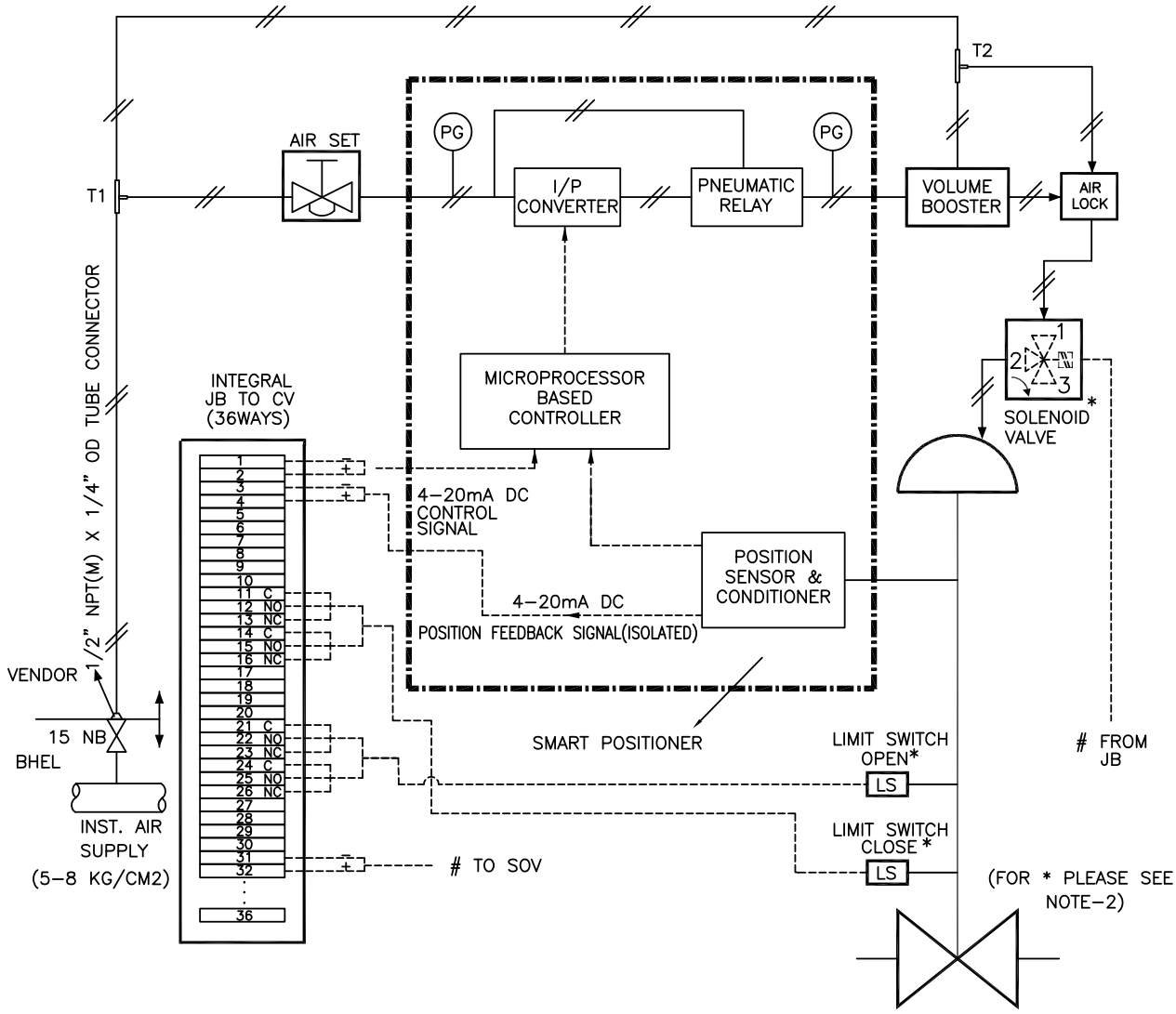

NOTES :-

1. POSITION OF EACH VALVE ON SUPPLY AIR FAILURE / ELECTRICAL SIGNAL FAILURE SHALL BE AS PER SPECIFICATION / DATA SHEET.
2. SOLENOID VALVE & LIMIT SWITCHES WILL BE PROVIDED ONLY FOR CONTROL VALVES IF INDICATED IN RESPECTIVE DATA SHEETS.
3. SOLENOID VALVES PORTS CONDITION:
   PORT 1 AND 2 SHALL BE CONNECTED UNDER DE-ENERGISED CONDITION.
   PORT 2 AND 3 SHALL BE CONNECTED UNDER ENERGISED CONDITION.
4. PRESSURE GAUGES REQUIRED FOR AIR SUPPLY & OUTPUT(S).
5. MOUNTING ACCESSORIES AS REQUIRED.
6. POSITION FEEDBACK SIGNAL SHALL BE 2 WIRE 4-20mA ISOLATED SIGNAL.
7. JB TERMINALS SHALL BE CAGE CLAMP TYPE SUITABLE FOR 2.5 SQ. MM COPPER WIRE. EXTERNAL CONNECTION, OF PLUG IN TYPE OR THROUGH CABLE GLAND, SHALL BE AS PER DATA SHEET
8. ALL APPLICABLE ACCESSORIES SHALL BE PROVIDED AS INDICATED IN THE INDIVIDUAL CONTROL VALVE DATA SHEET / ACCESSORIES DATA SHEET.
9. 12 METERS 1/4" SS TUBING (AS PER ACCESSORIES DATA SHEET) & 1 SET OF FITTINGS TO BE SUPPLIED FOR EACH CONTROL VALVE FOR CONNECTION TO ISO VLV AT INST AIR HEADER ON ONE END AND TO AIR LOCK RELAY/AIR FILTER REGULATOR ON THE OTHER END. ALL THE BRASS / SS FITTINGS SHALL BE DOUBLE COMPRESSION TYPE.
10. VOLUME BOOSTER (ALONG WITH TEE-T2 AND RELATED TUBING & CONNECTORS) SHALL BE PROVIDED IF REQUIRED. AIR CONNECTION TO VOLUME BOOSTER FROM TEE-T2 SHALL BE PROVIDED.

STANDARD CONTROL VALVE HOOK-UP DIAGRAM
(FOR ON / OFF TYPE)

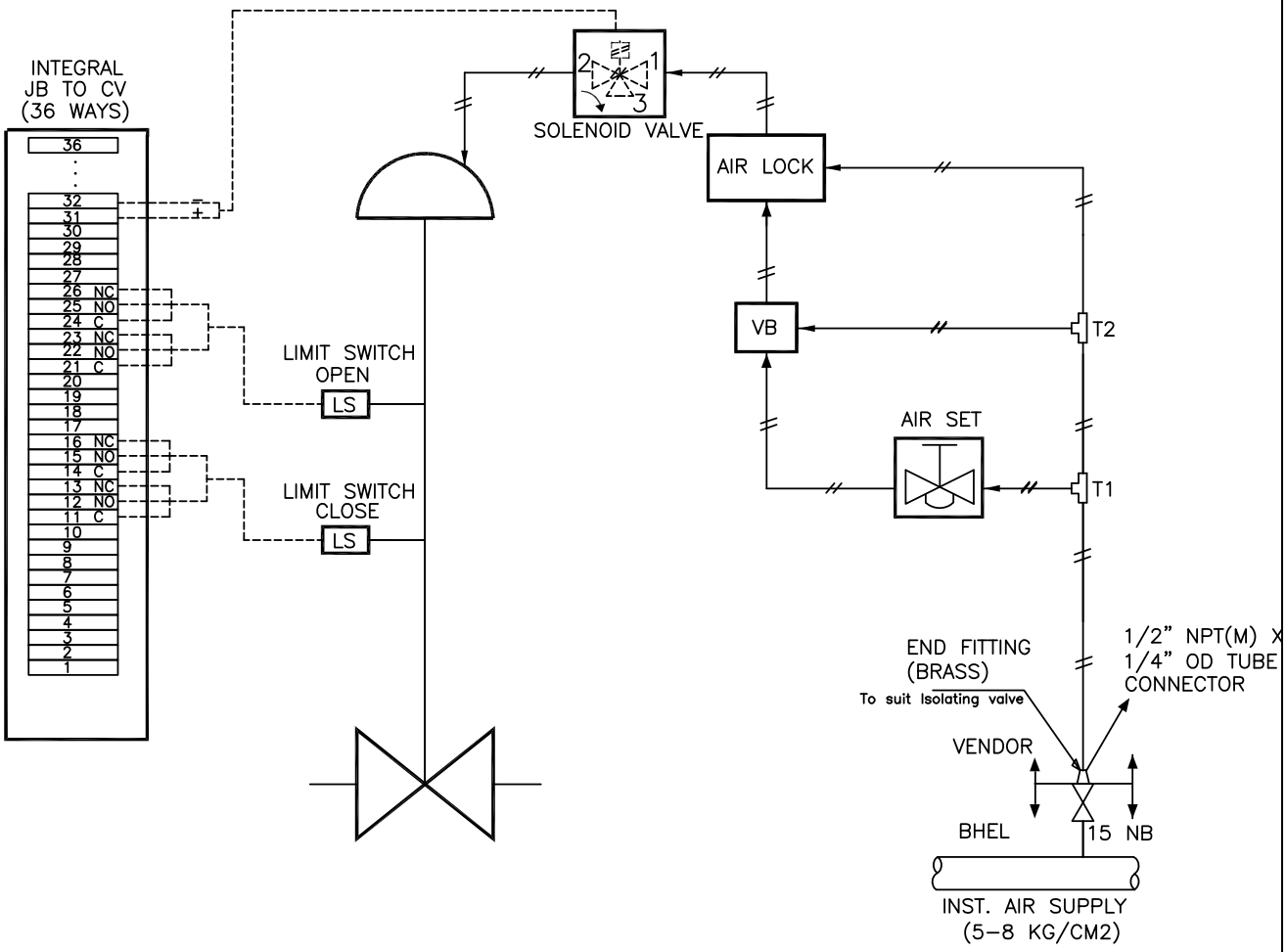

NOTES :–

1. POSITION OF EACH VALVE ON SUPPLY AIR FAILURE / ELECTRIC SIGNAL FAILURE SHALL BE AS PER SPECIFICATION / DATA SHEET.
2. SOLENOID VALVES PORTS CONDITION:
   PORT 1 AND 2 SHALL BE CONNECTED UNDER DE–ENERGISED CONDITION.
   PORT 2 AND 3 SHALL BE CONNECTED UNDER ENERGISED CONDITION.
3. MOUNTING ACCESSORIES AS REQUIRED.
4. JB TERMINALS SHALL BE CAGE CLAMP TYPE SUITABLE FOR 2.5 SQ. MM COPPER WIRE. EXTERNAL CONNECTION, OF PLUG IN TYPE OR THROUGH CABLE GLAND, SHALL BE AS PER DATA SHEET.
5. ALL APPLICABLE ACCESSORIES SHALL BE PROVIDED AS INDICATED IN THE INDIVIDUAL CONTROL VALVE DATA SHEET / ACCESSORIES DATA SHEET.
6. 12 METERS 1/4" SS TUBING (AS PER ACCESSORIES DATA SHEET) & 1 SET OF FITTINGS TO BE SUPPLIED FOR EACH CONTROL VALVE FOR CONNECTION TO ISO VLV AT INST AIR HEADER ON ONE END AND TO AIR LOCK RELAY/AIR FILTER REGULATOR ON THE OTHER END. ALL THE BRASS / SS FITTINGS SHALL BE DOUBLE COMPRESSION TYPE.

File No. PEM-PG0MM(24)/1/2025-PS-PEM-PGI-1 (Computer No. 134626)

Generated from eOffice by Manoj Bhardwaj, ENGINEER(MB)-PG I-I-PS-PEM, ENGINEER, BHARAT HEAVY ELECTRICAL LTD on 07/01/2025 03:33 pm

STANDARD CONTROL VALVE HOOK-UP DIAGRAM
(DOUBLE ACTING PISTON ACTUATOR WITH SMART POSITIONER)

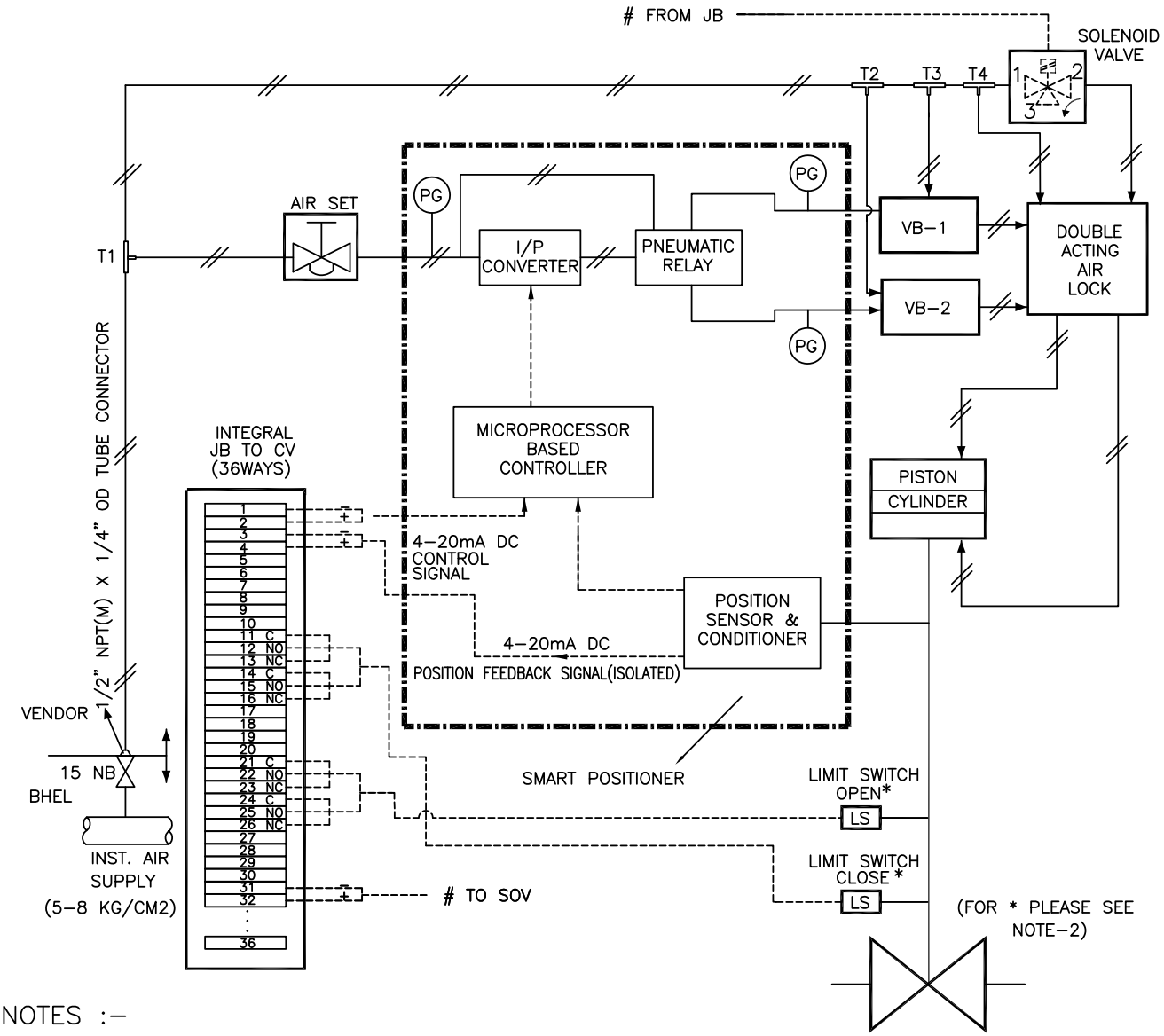

NOTES :–

1. POSITION OF EACH VALVE ON SUPPLY AIR FAILURE / ELECTRICAL SIGNAL FAILURE SHALL BE AS PER SPECIFICATION / DATA SHEET. AIR LOCK SHALL BE PROVIDED ACCORDINGLY.
2. SOLENOID VALVE & LIMIT SWITCHES WILL BE PROVIDED ONLY FOR CONTROL VALVES IF INDICATED IN RESPECTIVE DATA SHEETS.
3. SOLENOID VALVES PORTS CONDITION:
   PORT 1 AND 2 SHALL BE CONNECTED UNDER DE–ENERGISED CONDITION.
   PORT 2 AND 3 SHALL BE CONNECTED UNDER ENERGISED CONDITION.
4. PRESSURE GAUGES REQUIRED FOR AIR SUPPLY & OUTPUT(S).
5. MOUNTING ACCESSORIES AS REQUIRED.
6. POSITION FEEDBACK SIGNAL SHALL BE 2 WIRE 4–20mA ISOLATED SIGNAL.
7. JB TERMINALS SHALL BE CAGE CLAMP TYPE SUITABLE FOR 2.5 SQ. MM COPPER WIRE. EXTERNAL CONNECTION, OF PLUG IN TYPE OR THROUGH CABLE GLAND, SHALL BE AS PER DATA SHEET
8. ALL APPLICABLE ACCESSORIES SHALL BE PROVIDED AS INDICATED IN THE INDIVIDUAL CONTROL VALVE DATA SHEET / ACCESSORIES DATA SHEET.
9. 12 METERS 1/4" SS TUBING (AS PER ACCESSORIES DATA SHEET) & 1 SET OF FITTINGS TO BE SUPPLIED FOR EACH CONTROL VALVE FOR CONNECTION TO ISO VLV AT INST AIR HEADER ON ONE END AND TO AIR LOCK RELAY/AIR FILTER REGULATOR ON THE OTHER END. ALL THE BRASS / SS FITTINGS SHALL BE DOUBLE COMPRESSION TYPE.
10. VOLUME BOOSTER (ALONG WITH TEE–T2 AND RELATED TUBING & CONNECTORS) SHALL BE PROVIDED IF REQUIRED. AIR CONNECTION TO VOLUME BOOSTER FROM TEE–T2 & TEE–T3 SHALL BE PROVIDED.

File No. PEM-PG0MM(24)/1/2025-PS-PEM-PGI-1 (Computer No. 134626)
Generated from eOffice by Manoj Bhardwaj, ENGINEER(MB)-PG I-I-PS-PEM, ENGINEER, BHARAT HEAVY ELECTRICAL LTD on 07/01/2025 03:33 pm

CONTROL VALVE HOOK-UP DIAGRAM
(WITH SMART POSITIONER-PROFIBUS BASED)

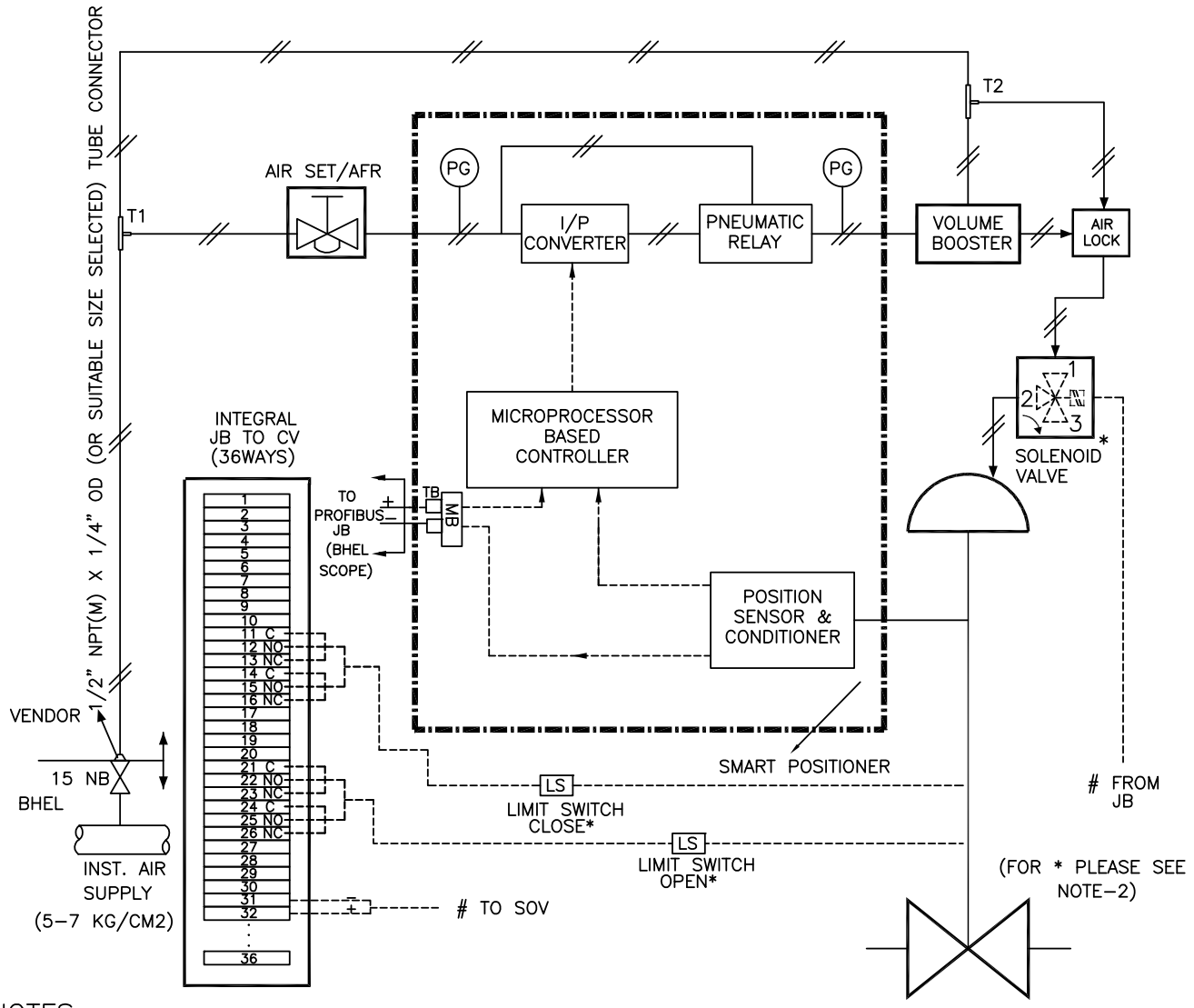

NOTES :–

1. POSITION OF EACH VALVE ON SUPPLY AIR FAILURE / ELECTRICAL SIGNAL FAILURE SHALL BE AS PER SPECIFICATION / DATA SHEET.
2. SOLENOID VALVE & LIMIT SWITCHES WILL BE PROVIDED ONLY FOR CONTROL VALVES IF INDICATED IN RESPECTIVE DATA SHEETS.
3. SOLENOID VALVES PORTS CONDITION:
   PORT 1 AND 2 SHALL BE CONNECTED UNDER DE–ENERGISED CONDITION.
   PORT 2 AND 3 SHALL BE CONNECTED UNDER ENERGISED CONDITION.
4. PRESSURE GAUGES REQUIRED FOR AIR SUPPLY AT INLET AND OUTLET OF SMART POSITIONERS.
5. MOUNTING ACCESSORIES AS REQUIRED.
6. PROFIBUS BASED SMART POSITIONER SHALL BE PROVIDED.
7. JB TERMINALS SHALL BE CAGE CLAMP TYPE SUITABLE FOR 2.5 SQ. MM COPPER WIRE. EXTERNAL CONNECTION, OF PLUG IN TYPE OR THROUGH CABLE GLAND, SHALL BE AS PER DATA SHEET.
8. ALL APPLICABLE ACCESSORIES SHALL BE PROVIDED AS INDICATED IN THE INDIVIDUAL CONTROL VALVE DATA SHEET / ACCESSORIES DATA SHEET.
9. TUBING AND FITTINGS TO BE PROVIDED AS FOLLOWS:–
   (a) TUBING: MATERIAL– SS316; SIZE– 1/4" OR SUITABLE SIZE SELECTED FOR EACH CONTROL VALVE ASSEMBLY; LENGTH– 12 METER PER CV.
   (b) FITTINGS: MATERIAL– SS,DOUBLE COMPRESSION TYPE; TUBE CONNECTOR– 1/2" NPT(M) X 1/4" OR SUITABLE SIZE SELECTED FOR EACH CONTROL VALVE ASSEMBLY; FITTINGS FOR CONNECTION TO AIR FILTER REGULATOR,AIR LOCK RELAY,IA HEADER ISOLATION VALVE AND EQUAL TEES.
10. VOLUME BOOSTER/DUMP VALVE AND ITS RELATED TUBING & CONNECTORS SHALL BE PROVIDED, IF REQUIRED TO ACHIEVE THE DESIRED TRAVEL TIME (<10Sec). AIR CONNECTION TO VOLUME BOOSTER/DUMP VALVE SHALL ALSO BE PROVIDED.
11. EXPANDER/REDUCER BETWEEN VALVE BODY AND PIPE SHALL BE SUPPLIED BY BHEL.
12. EXPANDER/REDUCER BETWEEN VALVE BODY AND DIFFUSER/CARTRIDGE/SILENCER(IF APPLICABLE) SHALL BE SUPPLIED BY BIDDER.

File No: PEM-PGOMM(24)/1/2025-PS-PEM-PGI-I (Computer No. 134626)
Generated from eOffice by Manoj Bhardwaj, ENGINEER(MB)-PG I-1-PS-PEM, ENGINEER, BHARAT HEAVY ELECTRICAL LTD on 07/01/2025 03:33 pm

STANDARD CONTROL VALVE HOOK-UP DIAGRAM (DOUBLE ACTING PISTON ACTUATOR WITH SMART POSITIONER-PROFIBUS BASED)

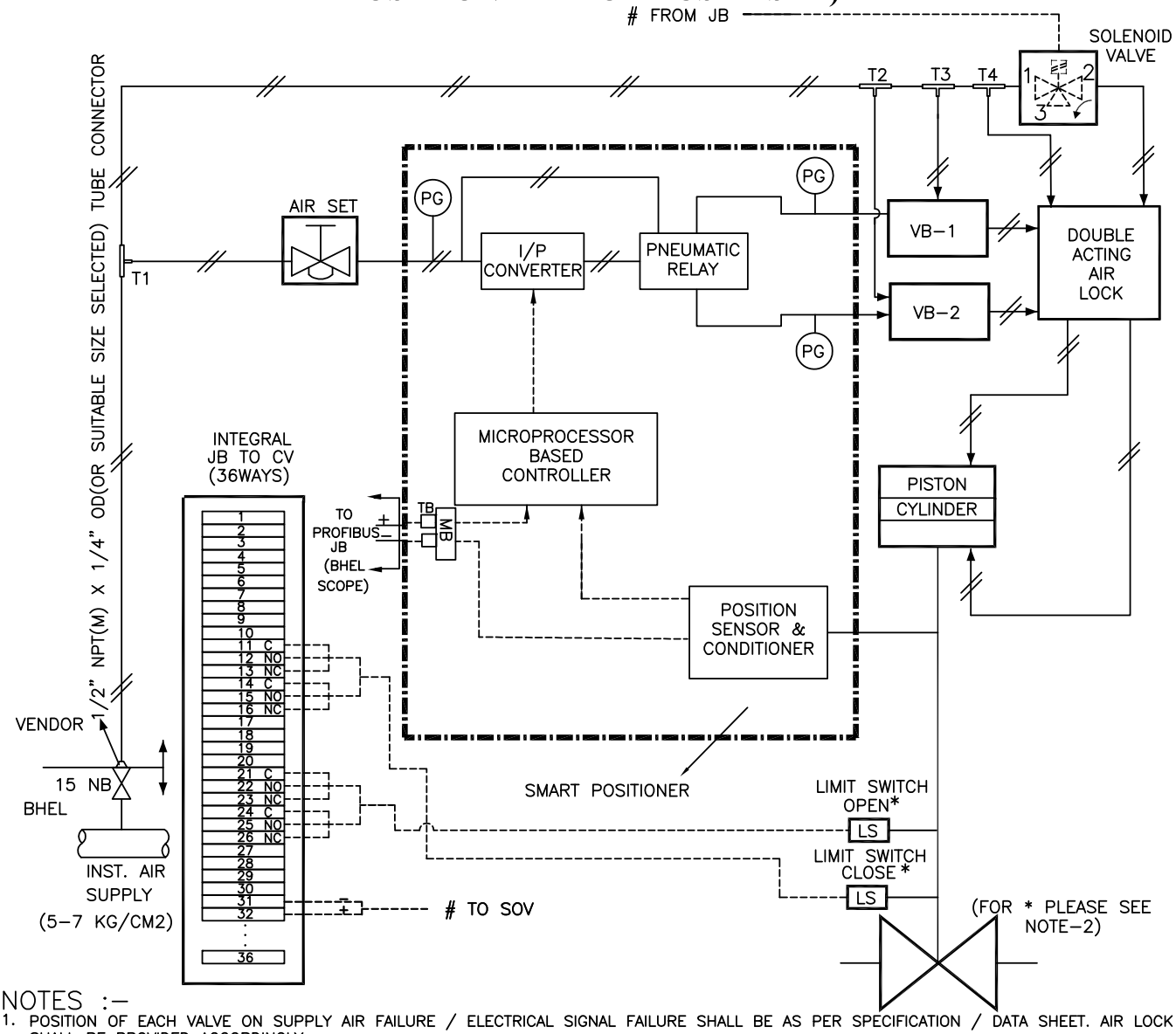

NOTES :-

1. POSITION OF EACH VALVE ON SUPPLY AIR FAILURE / ELECTRICAL SIGNAL FAILURE SHALL BE AS PER SPECIFICATION / DATA SHEET. AIR LOCK SHALL BE PROVIDED ACCORDINGLY.
2. SOLENOID VALVE & LIMIT SWITCHES WILL BE PROVIDED ONLY FOR CONTROL VALVES IF INDICATED IN RESPECTIVE DATA SHEETS.
3. SOLENOID VALVES PORTS CONDITION:
   PORT 1 AND 2 SHALL BE CONNECTED UNDER DE-ENERGISED CONDITION.
   PORT 2 AND 3 SHALL BE CONNECTED UNDER ENERGISED CONDITION.
4. PRESSURE GAUGES REQUIRED FOR AIR SUPPLY AT INLET & OUTLET OF SMART POSITIONER.
5. MOUNTING ACCESSORIES AS REQUIRED.
6. PROFIBUS BASED SMART POSITIONER SHALL BE PROVIDED.
7. JB TERMINALS SHALL BE CAGE CLAMP TYPE SUITABLE FOR 2.5 SQ. MM COPPER WIRE. EXTERNAL CONNECTION, OF PLUG IN TYPE OR THROUGH CABLE GLAND, SHALL BE AS PER DATA SHEET
8. ALL APPLICABLE ACCESSORIES SHALL BE PROVIDED AS INDICATED IN THE INDIVIDUAL CONTROL VALVE DATA SHEET / ACCESSORIES DATA SHEET.
9. TUBING AND FITTINGS TO BE PROVIDED AS FOLLOWS:-
   (a) TUBING: MATERIAL- SS316; SIZE- 1/4" OR SUITABLE SIZE SELECTED FOR EACH CONTROL VALVE ASSEMBLY; LENGTH- 12 METER PER CV.
   (b) FITTINGS: MATERIAL- SS,DOUBLE COMPRESSION TYPE; TUBE CONNECTOR- 1/2" NPT(M) X 1/4" OR SUITABLE SIZE SELECTED FOR EACH CONTROL VALVE ASSEMBLY; FITTINGS FOR CONNECTION TO AIR FILTER REGULATOR,AIR LOCK RELAY,IA HEADER ISOLATION VALVE AND EQUAL TEES.
10. VOLUME BOOSTER/DUMP VALVE AND ITS RELATED TUBING & CONNECTORS SHALL BE PROVIDED, IF REQUIRED TO ACHIEVE THE DESIRED TRAVEL TIME (<10Sec). AIR CONNECTION TO VOLUME BOOSTER/DUMP VALVE SHALL ALSO BE PROVIDED.
11. EXPANDER/REDUCER BETWEEN VALVE BODY AND PIPE SHALL BE SUPPLIED BY BHEL.
12. EXPANDER/REDUCER BETWEEN VALVE BODY AND DIFFUSER/CARTRIDGE/SILENCER(IF APPLICABLE) SHALL BE SUPPLIED BY BIDDER.

बी एच ई एल BHEL	TECHNICAL SPECIFICATION & DATA SHEET FOR CONTROL VALVE WITH ACCESSORIES (PNEUMATICALLY OPERATED)	Specification No.: PE-TS-512-145-H104 Rev. No. 00 Date :30.12.2024

SPECIFICATIONS FOR MICROPROCESSOR BASED SMART POSITIONER

1	Electrical	a) Input Demand Signal	4-20 mA **for HART compatible; Soft Signal for Profibus**
		b) Power Supply	Loop Powered from the output card of Control System.
		c) HART / Profibus Protocol	Compatibility for Remote Calibration & Diagnostics (Super-imposed HART signal on input Signal 4-20 mA and Profibus
		d. Valve position sensing	Position sensing: 4-20 mA output signal for HART and soft signal for Profibus compatible
2	Environment	a) Operating temp.	(-)30 To 80 Deg. C
		b) Humidity	0-95 %
		c) Protection class	IP-65 Minimum
3	Software for Configuration and Diagnostics	Software	Software shall meet the requirements for Configuration, Diagnostics, Calibration and Testing of the actuator.
		Diagnostic/Test features	Advanced diagnostic features like Stroke counter or Travel counter, Leakage in actuators, Valve Signature analysis, Step Response test, Valve friction /Jamming detection etc to be provided.
4	Test reports/ Certificates	Factory Valve Signature Tests Reports (Pr Vs Valve travel and Travel Vs I/P signal) are to be provided.	
		Test certificates as per Manufacture Standard/Relevant Standard are to be submitted.	
5	Configuration/ Calibration.	Remote & Local Calibration, Auto & Manual Calibration shall be possible.	
6	Operating Range	Full range/ Split range.	
7	Modes	Valve Action	Direct / Reverse Valve Action
		Flow Characterization	Possible to fit Valve Characteristic Curves- Linear , Equal percentage etc.
8	Fail Safe/Fail Freeze	Fail Safe/Fail Freeze feature is to be provided. (In case the fail freeze feature is not intrinsic to the positioner, Bidder shall achieve the same externally through solenoid valve connected in the pneumatic circuit).	
9	Pneumatic	Air capacity	Sufficient to handle the valves & actuators selected/ Boosters to be supplied, if required.
		Air pressure	To suit the air supply pressure/quality available.
		Process connection	¼" NPT
10	Performance	Characteristic deviation	<=0.5 % of span.
		Ambient temp effect	<=0.01 %/ deg C or better.
11	EMC & CE Compliance	Required to International Standard like EN/IEC.	EN50081-2 & EN50082 or equivalent.
12	Accessories	In-built Operator Panel	Display with push buttons for configuration and display on the positioner itself (Password protected/Hardware lock).
		Press Gauge Block	For supply & output pressures, Air Filter Regulator and other accessories shall be provided on as required basis for making system complete.
		Electrical Cable Entry	1/2'"NPT, side or bottom entry to avoid water **ingress**
		Valves Mounting Assembly	**For-Single acting/Double acting actuators on as required basis**

बी एच ई एल BHEL	TECHNICAL SPECIFICATION & DATA SHEET FOR CONTROL VALVE WITH ACCESSORIES (PNEUMATICALLY OPERATED)	Specification No.: PE-TS-512-145-H104 Rev. No. 00 Date :30.12.24

CONTROL VALVES COMPLETE WITH POSITIONER AND ALL ACCESSORIES MOUNTED, TUBED AND TERMINATED ON JB

[A]	MAIN SUPPLY			
SR. NO.	TAG NO	DESCRIPTION	QTY/UNIT	TOTAL QTY FOR 2 UNITS
1	ASV-8	D/A PEGGING FROM AUX. STEAM HEADER	1	2
2	CRHV-6	D/A PEGGING FROM CRH LINE	1	2
3	CDV-25	LOW LOAD CONDENSATE CONTROL	1	2
4	CDV-39	GSC/CEP MIN. FLOW RECIRCULATION	1	2
5	CDV-65	CEP-A MIN. FLOW RECIRCULATION	1	2
6	CDV-67	CEP-B MIN. FLOW RECIRCULATION	1	2
7	CDV-69	CEP-C MIN. FLOW RECIRCULATION	1	2
8	CDV-43	EXCESS DUMP CONTROL	1	2
9	CDV-72	CONDENSATE FOR VALVE GLAND SEALING & F/T	1	2
10	CDV-84	CONDENSATE SPRAY FOR F/T	1	2
11	CDV-94	CONDENSATE SPRAY FOR UNIT F/T	1	2
12	DRV-53	HPH-9A NORMAL DRAIN TO HPH-8A	1	2
13	DRV-59	HPH-9B NORMAL DRAIN TO HPH-8B	1	2
14	DRV-56	HPH-9A ALT DRAIN TO F/T	1	2
15	DRV-62	HPH-9B ALT DRAIN TO F/T	1	2
16	DRV-2	HPH-8A NORMAL DRAIN TO HPH-7A	1	2
17	DRV-8	HPH-8B NORMAL DRAIN TO HPH-7B	1	2
18	DRV-5	HPH-8A ALT DRAIN TO F/T	1	2
19	DRV-11	HPH-8B ALT DRAIN TO F/T	1	2
20	DRV-15	HPH-7A NORMAL DRAIN TO DEAERATOR	1	2
21	DRV-22	HPH-7B NORMAL DRAIN TO DEAERATOR	1	2
22	DRV-18	HPH-7A ALT DRAIN TO F/T	1	2
23	DRV-25	HPH-7B ALT DRAIN TO F/T	1	2
24	DRV-82	LPH-5 NORMAL DRAIN TO LPH-4	1	2
25	DRV-85	LPH-5 ALT. DRAIN TO F/T	1	2
26	DRV-65	LPH-4 NORMAL DRAIN TO LPH-3	1	2
27	DRV-68	LPH-4 ALT. DRAIN TO F/T	1	2
28	DRV-77	DRIP PUMP DISCHARGE CONTROL	1	2
29	DRV-31	LPH-3 ALT. DRAIN TO F/T	1	2
30	DRV-48	DEAERATOR OVERFLOW TO F/T	1	2
31	DMV-43	NORMAL DM MU TO HOTWELL	1	2
32	DMV-78	EMERGENCY DM MU TO HOTWELL	1	2
33	ASV-16	DRAIN OF AUX STEAM FROM EXISTING UNIT HEADER TO UNIT F/T	1	1
34	ASV-16A	AUX STEAM FROM EXISTING UNIT HEADER	1	1
35	DMCWSG12	DMCW SYSTEM FOR SG AUX'S	1	2
36	DMCW18	DMCW SYSTEM FOR TG AUX'S	1	2
[B]	**1/4 " SS TUBING (12 METER FOR EACH TAG)**			840 MTR
[C]	**SS FITTINGS- FOR EACH TAG**		1 LOT	2 LOTS
1	SS FITTINGS for connection to Air Filter Regulator- FOR EACH TAG		1 LOT	2 LOTS
2	SS FITTINGS for connection to Air Lock Relay- FOR EACH TAG		1 LOT	2 LOTS
3	SS FITTINGS for connection to IA Header Isolation Valve - FOR EACH TAG		1 LOT	2 LOTS
4	SS EQUAL TEE - FOR EACH TAG		1 LOT	2 LOTS
5	SS 1/2 " NPT(M) X 1/4 " OD TUBE CONNECTOR- FOR EACH TAG		1 LOT	2 LOTS
[D]	**CV TEST CHARGES FOR EACH CONTROL VALVE**		1 LOT	1 LOT
[E]	**VALVE DIAGNOSTIC AND CONFIGURATION SOFTWARE (FOR ALL TAGS)**		1 LOT	2 LOTS

File No. PEM-PG0MM(24)/1/2025-PS-PEM-PGI-1 (Computer No. 134626)
Generated from eOffice by Manoj Bhardwaj, ENGINEER(MB)-PG I-1-PS-PEM, ENGINEER, BHARAT HEAVY ELECTRICAL LTD on 07/01/2025 03:33 pm

	TECHNICAL SPECIFICATION & DATA SHEET FOR CONTROL VALVE WITH ACCESSORIES (PNEUMATICALLY OPERATED)	Specification No.: PE-TS-512-145-H104
		Rev. No. 00
		Date :30.12.24

LIST OF COMMISSIONING SPARES		
S NO	**ITEM DESCRIPTION**	**QUANTITY FOR STATION**
1	Gaskets	One (1) set with each control valve tag
2	Gland Packing	One (1) set with each control valve tag

LIST OF MANDATORY SPARES		
Sr. No.	**Description**	**Qty FOR STATION**
[A]	**Mandatory Spares for SG DMCW valve**	
1	Pneumatic and electro-hydraulic actuator assembly	1 No. of each type, model and rating
2	Diaphragms, O' rings, seals etc.	5 Nos. of all types make etc.
3	Solenoid valves (if applicable)	1 Nos. of each type
4	Smart positioners (complete unit) & accessories (link assembly)	2 Nos. of each type, model and rating
5	Pneumatic air-filter/Regulator	2 Nos. of each type, make rating etc.
6	Air lock relays	1 Nos. of each type, model and rating
7	Valve trim (including cage, plug, stem, seat rings, guide bushings, etc.)	1 set for each type, class, size of control valve.
8	Gland Packing	5 sets
9	Gaskets	5 sets
[B]	**Mandatory Spares for CEP min recirculation valve**	
1	CEP recirculation valve trim which includes spindle with cone, seat ring, guide bush, cage	1 Set
2	CEP recirculation valve soft parts i.e. gland packing, seals, O-rings, gaskets etc.	3 Set
[C]	**Mandatory Spares for Process Connection Piping**	
1	Fittings	
(a)	SS FITTINGS for connection to Air Filter Regulator- FOR EACH TAG	100 nos. of each type
(b)	SS FITTINGS for connection to Air Lock Relay- FOR EACH TAG	100 nos. of each type
(c)	SS FITTINGS for connection to IA Header Isolation Valve - FOR EACH TAG	100 nos. of each type
(d)	SS EQUAL TEE - FOR EACH TAG	100 nos. of each type
2	Pneumatic air-filter/Regulator	20 Nos. of each type and model
3	Valves of all types(like Equalising Valves, Exhaust Valves, etc.)	20 Nos. of each type and model

NOTES

1. Wherever the quantities have been indicated for each type, size, thickness, material, radius, range etc., these shall cover all the items supplied and installed and the breakup for these shall be furnished in the bid. In case spares indicated in the list are not applicable to the particular design offered by the bidder, the bidder should offer spares applicable to offered design with quantities generally in line with the approach followed in the above list.

File No. PEM-PG0MM(24)/1/2025-PS-PEM-PGI-1 (Computer No. 134626)
Generated from eOffice by Manoj Bhardwaj, ENGINEER(MB)-PG I-1-PS-PEM, ENGINEER, BHARAT HEAVY ELECTRICAL LTD on 07/01/2025 03:33 pm

	TECHNICAL SPECIFICATION & DATA SHEET FOR CONTROL VALVE WITH ACCESSORIES (PNEUMATICALLY OPERATED)	**Specification No.: PE-TS-512-145-H104**
		Rev. No. 00
		Date :30.12.24

PAINTING SPECIFICATION

Package	Condition	Surface Preparation	Primer Coat	No. of Coats	DFT (in Microns)	Intermediate Coat (in Microns)	No. of Coats	DFT (in Microns)	Final Coat	No. of Coats	DFT (in Microns)	Total DFT (Min)
Control Valve	F91,WC9,WCB valves (above 60 deg C)	Sa 2.5	Heat Resistant Aluminium Paint IS 13183, Grade I/II	1	20	NA	NA	NA	Heat Resistant Aluminium Paint IS 13183, Grade I/II	1	20	40
	Carbon Steel Actuators and F91,WC9,WCB valves (upto 60 deg C #)	Sa 2.5	Epoxy Based Zinc Primer (92% Zinc in dry film (min), % VS = 35 (min))	1	30	Epoxy based MIO pigmented intermediate coat	1	75	Epoxy based Finish paint to IS14209 / Aliphatic acrylic Polyurethane paint to IS 13213	2	30	165

NOTES:

Stainless Steel, Non- Ferrous and Galvanised item/portion will not be painted

- For Cast/forged valves upto & including design temperature 60Deg.C, Aluminium painting as per IS-13183 Gr-3 or better with total DFT 40Micron is also acceptable

DFT shown is minimum. Bidder may offer higher paint thickness

बीएचईएल BHEL	TECHNICAL SPECIFICATION & DATA SHEET FOR CONTROL VALVE WITH ACCESSORIES (PNEUMATICALLY OPERATED)	Specification No.: PE-TS-512-145-H104
		Rev. No. 00
		Date :30.12.24

PACKING SPECIFICATION

The item with all accessories needs to be suitably packed to avoid physical damage and corrosion during transit and storage. The packing shall be suitable for different handing operation and for the adverse condition during transportation and during indoor/outdoor storage of material. The following are the minimum requirements to be complied with for packing.

Type of Packing: Item shall be fully covered with multi layered cross laminated colourless polyethylene sheet of at least 100 GSM and shall be packed inside wooden box. Sufficient amount of silica gel also to be placed inside polyethylene sheet. Item shall be firmly fixed to the bottom of the packing box to restrict movement. The electronic items like positioner and other delicate items like pressure gauges etc. shall be individually wrapped in polyethylene air bubble film or black foam. End openings are to be protected with plastic caps. Corrosion inhibitors are to be applied on all unpainted carbon steel surfaces.

Quality of wood: Wood used for packing box shall be Pinewood, Rubber wood, Mango wood, Fir wood, Silver Oak wood or other as per availability with moisture content not exceeding 30%.

Cushioning material and moisture absorber: Suitable cushioning shall be provided by rubberized coir/ thermocol / expanded soft polyethylene foam. Adequate quantity of silica gel packed in thin muslin cloth cotton bags should be suitably placed inside the packing box.

Packing slip & holder: Packing slip kept in polyethylene bag shall be placed inside the wooden box at appropriate place. One copy of packing slip wrapped in polyethylene bag covered in galvanized iron tin sheet/ aluminium packing slip holder shall be fixed on the external surface the packing box.

	TECHNICAL SPECIFICATION & DATA SHEET FOR CONTROL VALVE WITH ACCESSORIES (PNEUMATICALLY OPERATED)	Specification No.: PE-TS-512-145-H104
		Rev. No. 00
		Date :30.12.24

DOCUMENTATION REQUIREMENT

DRAWINGS & DOCUMENTS TO BE SUBMITTED ALONG WITH THE BID

1	BIDDER TO SUBMIT THE DOCUMENTS AS PER CLAUSE MENTIONED IN NIT.

DRAWINGS & DOCUMENTS TO BE SUBMITTED AFTER AWARD OF CONTRACT

Sl. No.	DOCUMENT TITLE
1	DATA SHEET, CALCULATION, BOQ/BOM, GA DRAWING, EDGE Preparation details & HOOK UP /INSTALLATION DRAWING for Control Valves
2	QAP for Control Valves
3	CALIBRATION REPORTS

DRAWINGS & DOCUMENTS TO BE SUBMITTED AS FINAL/AS-BUILT DOCUMENT

Sl. No.	DOCUMENT TITLE
1	DATA SHEET, CALCULATION, BOQ/BOM, GA DRAWING, EDGE Preparation details & HOOK UP /INSTALLATION DRAWING for Control Valves
2	APPROVED QUALITY PLAN
3	CALIBRATION REPORTS
4	CATALOGUE/TECHNICAL LITERATURE/O&M MANUAL
5	ALL TEST CERTIFICATES

	TECHNICAL SPECIFICATION & DATA SHEET FOR CONTROL VALVE WITH ACCESSORIES (PNEUMATICALLY OPERATED)	Specification No.: PE-TS-512-145-H104						
		Rev. No. 00						
		Date :30.12.2024						
DATA SHEET FOR CONTROL VALVE TO BE FILLED BY BIDDER FOR EACH TAG AT TENDER STAGE								
A. GENERAL INFORMATION								
1	TAG NUMBER / SERVICE							
2	LOCATION / DUTY							
B. DESIGN CODES & STANDARDS								
3	CODE / STANDARD	REFER GENERAL NOTES						
C. TECHNICAL PARAMETERS / DESIGN FEATURES								
4	PIPE SIZE (OD X THK) mm INLET / OUTLET							
5	PIPE MATERIAL INLET / OUTLET							
6	VALVE BODY TYPE / MATERIAL / SIZE CRITERIA							
7	GUIDING / NO. OF PORTS / TRIM FORM							
8	CAGE TYPE / CAGE MATERIAL / GUIDE BUSH							
9	PLUG TYPE / PLUG MATERIAL / STEM MATERIAL							
10	YOKE MATERIAL / SEAT MATERIAL & TYPE							
11	PACKING MATERIAL / NOS / TYPE							
12	END CONNECTION / ANSI RATING / BONNET TYPE							
13	FLOW ACTION / VALVE OUTLET VELOCITY							
14	LEAKAGE CLASS / NOISE LEVEL (dBA)							
15	VACUUM SERVICE / ANTI CAVITATION TRIM							
16	ACTUATOR TYPE / TYPE OF PNEUMATIC ACT / SIZING CRITERIA							
17	TRAVEL TIME FOR OPEN TO CLOSE, CLOSE TO OPEN							
18	VALVE POSN. ON: SIGNAL AIR FAILURE / SUPPLY AIR FAILURE							
19	EXPANDER / REDUCER BET CV AND PROCESS PIPE							
20	EXPANDER / REDUCER BET CV AND CARTRIDGE(IF CATRIDGE IS APPLICABLE)							
21	SMART POSITIONER / POSITION LIMIT SWITCH							
22	POSITION TRANSMITTER / E/P CONVERTER							
23	AIR FILTER REGULATOR / AIR LOCK RELAY							
24	SOLENOID VALVE / JUNCTION BOX							
25	HAND WHEEL (SIDE MOUNTED) / LOCAL POSITIONER INDICATOR							
26	ELECTRO PNEUMATIC POSITIONER							
27	SERVICE CONDITIONS	FLOW (T/HR)	INLET PR KG/CM2(A)	OUTLET PR. KG/CM2(A)	TEMP DEG. C	CALCULATED CV	% VLV LIFT	VALVE O/L VELOCITY
28								
29								
30								
31								
31a								
31b								
31c								
32	BODY DESIGN PRESSURE (KG/CM2 (g)) : TEMP (DEG C)							
33	IBR FORM-IIIC							
34	VALVE TYPE							
D. GUARENTEED PERFORMANCE REQUIREMENTS								
35	LINEARITY / HYSTERISIS / SENSITIVITY / OVERALL ACCURACY	+/- 1%	+/- 1%	+/- 0.5%	+/- 2%			
E. PACKING								
36	AS PER ENCLOSED SPECIFICATION							
F. PAINTING								
37	AS PER ENCLOSED SPECIFICATION							

File No. PEM-PG0MM(24)/1/2025-PS-PEM-PGI-1 (Computer No. 134626)
Generated from eOffice by Manoj Bhardwaj, ENGINEER(MB)-PG I-1-PS-PEM, ENGINEER, BHARAT HEAVY ELECTRICAL LTD on 07/01/2025 03:33 pm

बी एच ई एल BHEL	TECHNICAL SPECIFICATION & DATA SHEET FOR CONTROL VALVE WITH ACCESSORIES (PNEUMATICALLY OPERATED)	Specification No.: PE-TS-512-145-H104 Rev. No. 00 Date :30.12.24

COMPLIANCE CERTIFICATE

1	It is hereby confirmed that the technical specification (sheet 1 to 58) has been read and understood. We confirm compliance to the tender specification including any prebid clarification and amendments issued prior to techno-commercial bid opening without any deviation.
2	It is hereby declared that any technical submittal which was not specifically asked by BHEL in NIT shall not to be considered as part of bid and shall not be evaluated by BHEL.

Signature of authorised Representative :

Name and Designation :

Name & Address of the Bidder :

Date :

TALCHER PROJECT

TECHNICAL PQR AND TECHNICAL SPECS

PRE-QUALIFICATION REQUIREMENT (TECHNICAL)

	CONTROL VALVES WITH ACCESSORIES	PE-PQ-497-145-H001	
		DATE	24/12/2024
	2 X 660 MW TALCHER THERMAL POWER PLANT	REV NO	00

1.0	Bidder should be Original equipment manufacturer (OEM) for CONTROL VALVES. In case bidder is not the OEM, evaluation shall be done as following :- (i) If bidder happens to be an Indian subsidiary of foreign OEM, then credentials of foreign OEM can be considered for meeting the PQR. (ii) If bidder happens to be authorised channel partner or has a valid collaboration agreement/licensing agreement with some other company or being a Joint Venture company, then the credentials of collaborator/licensing company/Principal company/JV partner can also be considered for meeting PQR as per the scope of work. The scope matrix shall include their respective roles including design vetting, manufacturing of critical component and warranty/ guarantee. If bidder qualifies on the basis of credentials of their principal/ JV partner/ Collaborator etc., then the principal/ JV partner/ Collaborator shall be responsible for overall design vetting and warranty/ guarantee of the package.
2.0	The Product being offered by the bidder should be in use successfully in power plant or any other industrial application for at least 1 (One) year. Bidder to submit either of following supporting documents for the product (control valve) with the following parameters:- (i) Minimum valve size = 4” (ii) Minimum pressure rating = ANSI #300 Copy of minimum 1 (One) Performance Certificate from end user / Customer certifying that product is running successfully for 1 (One) year from date of commissioning. The certificate should clearly indicate date of commissioning, date of issue of certificate and name/designation of the certificate issuer. Copy of purchase order & technical parameters to be attached along with the performance certificate. The date of satisfactory performance feedback certificate should not be later than the date of subject enquiry/NIT. OR Copy of repeat orders from minimum 2 (Two) different purchasers. Order received by supplier from same purchaser with a gap of minimum 2 (Two) years shall be considered as repeat order. Copy of technical parameters for each order to be attached. The date of repeat order should not be later than the date of subject enquiry/NIT.
3.0	Bidder to furnish experience list of last 5 years indicating customer name, purchase order reference, item supplied & year of supply to establish the continuity of business.
4.0	Bidder to submit all supporting documents in English. If documents submitted by bidder are in language other than English, a self-attested English translated document should also be submitted.
5.0	Notwithstanding anything stated above, BHEL reserves the right to assess the capabilities and capacity of the bidders/collaborators to perform the contract, should the circumstances warrant such assessment in the overall interest of BHEL.
6.0	Consideration of offer shall be subject to customer’s approval of bidders.
7.0	After satisfactory fulfilment of all the above criteria/ requirement, offer shall be considered for further evaluation as per NIT and all the other terms of the tender.

PREPARED BY	REVIEWED BY	APPROVED BY
SANDHYA BASWAL (MGR)	CHETAN MALIK (SR. MGR)	SURESH CHAND SHARMA (SR. DGM)

File No. PEM-PG0MM(24)/1/2025-PS-PEM(PG-I-I) (Computer No. 134626)
Generated from eOffice by Manoj Bhardwaj, ENGINEER(MB)-PG I-I-PS-PEM, ENGINEER, BHARAT HEAVY ELECTRICAL LTD on 07/01/2025 03:43 pm

	TECHNICAL SPECIFICATION & DATA SHEET FOR CONTROL VALVE WITH ACCESSORIES (PNEUMATICALLY OPERATED)	Specification No.: PE-TS-497-145-H104
		Rev. No. 00
		Date : 30.12.2024

TECHNICAL SPECIFICATION

FOR

CONTROL VALVES
WITH ACCESSORIES (OTHER THAN FDV-14)

2 X 660 MW TALCHER THERMAL POWER PLANT

SPECIFICATION No. PE-TS-497-145-H104

BHARAT HEAVY ELECTRICALS LIMITED
POWER SECTOR
PROJECT ENGINEERING MANAGEMENT DIVISION
NOIDA, INDIA

File No. PEM-PG0MM(24)/1/2025-PS-PEM-PGI-1 (Computer No. 134626)
Generated from eOffice by Manoj Bhardwaj, ENGINEER(MB)-PG I-1-PS-PEM, ENGINEER, BHARAT HEAVY ELECTRICAL LTD on 07/01/2025 03:44 pm

बी एच ई एल BHEL	TECHNICAL SPECIFICATION & DATA SHEET FOR CONTROL VALVE WITH ACCESSORIES (PNEUMATICALLY OPERATED)	Specification No.: PE-TS-497-145-H104
		Rev. No. 00
		Date : 30.12.2024

INDEX

Sl No.	DESCRIPTION	PAGE NO.
1	SCOPE	3
2	GENERAL TECHNICAL REQUIREMENTS	4
3	E-LEARNING MODULE	6
4	DATA SHEET	10
5	DATA SHEET FOR CONTROL VALVE ACCESSORIES	36
6	QUALITY PLAN	37
7	CONTROL VALVE HOOK UP DIAGRAM	44
8	SPECIFICATION FOR SMART POSITIONER	50
9	BILL OF QUANTITY (BOQ)	51
10	BILL OF QUANTITY (BOQ)-MANDATORY SPARES	52
11	PAINTING & PACKING	53
12	DOCUMENT REQUIRED	55
13	DATASHEET TO BE FILLED BY BIDDER	56
14	COMPLIANCE CERTIFICATE	57

बी एच ई एल BHEL	TECHNICAL SPECIFICATION & DATA SHEET FOR CONTROL VALVE WITH ACCESSORIES (PNEUMATICALLY OPERATED)	Specification No.: PE-TS-497-145-H104
		Rev. No. 00
		Date : 30.12.2024

SCOPE

CONTROL VALVES COMPLETE WITH POSITIONER AND ALL ACCESSORIES MOUNTED, TUBED AND TERMINATED ON JB:		
1	SUPPLY INCLUDING DESIGN, ENGINEERING & MANUFACTURING	YES
2	INSPECTION & TESTING INCLUDING CV TEST	YES
3	ERECTION & COMMISSIONING	NO
4	SUPERVISION OF ERECTION & COMMISSIONING	NO
5	COMMISSIONING SPARES	YES
6	MANDATORY SPARES	YES
7	O & M SPARES	NO
8	PACKING	YES
9	PAINTING	YES
10	TRANSPORTATION & DELIVERY TO SITE	YES

	TECHNICAL SPECIFICATION & DATA SHEET FOR CONTROL VALVE WITH ACCESSORIES (PNEUMATICALLY OPERATED)	Specification No.: PE-TS-999-145-H104 Rev. No. 00 Date : 30.12.24

GENERAL TECHNICAL REQUIREMENT

1	It is not the intent to specify herein all the details of design and manufacturing. The equipment shall conform in all respects to high standards of design, engineering and workmanship and shall be capable of performing the required duties in a manner acceptable to purchaser who will interpret the meaning of drawings and specifications and shall be entitled to reject any work or material which in his judgement is not in full accordance herewith.
2	Bidder shall also ensure that the offered equipment shall comply with all applicable statutory and regulatory requirements.
3	In the event of any conflict between the requirements of two clauses of this specification, documents or requirements of different codes and standards specified, the more stringent requirement as per the interpretation of the owner shall apply.
4	Drawing/document submission shall be through web based Document Management System(DMS) of BHEL. Bidder would be provided access to the DMS for drawing/document submission. Bidder to ensure internet connectivity of min speed of 2Mbps at their end.
5	Drawings/ documents submitted by vendor at any stage shall be complete in all respects. Any incomplete drawing submitted shall be treated as non-submission with delays attributable to vendor. For any clarification/ discussion required to complete the drawings, the bidder shall depute his personnel to BHEL / Customer's Office as per the requirement for across the table submission/ finalization of drawings.
6	Trim and body material has been specified in the respective data sheet. However, any substitute material if recommended by the manufacturer shall be either equivalent or superior to those specified and can be provided if found technically acceptable without any commercial and delivery impact.
7	In case bidder is not able to offer the required characteristics due to design considerations, modified Trim (Mod.EQ percentage or Mod. linear) can be offered subject to BHEL acceptance.
8	E- Learning Module shall be supplied by bidder as per Details provided in specification.
9	Bidder shall submit Quality Plan in the event of order based on the Quality Plan enclosed herein. QP will be subject to BHEL / CUSTOMER approval & customer hold points for inspection / testing shall be marked in the QP at the contract stage.
10	In case, the bidder is sourcing the item/any component from outside India, the third party inspection shall be arranged by bidder at their cost and shall be deemed to be considered by the bidder in their offer without any delivery impact.
11	Any change in valve size, percentage opening etc., if desired by BHEL / customer during approval of the documents after award of contract, within the gamut of tender specification, same shall be carried out by bidder without any commercial and delivery impact.
12	Sub vendor list is attached. Any additional sub - vendors proposed by bidder during contract stage shall be subject to BHEL/ Customer approval in the event of order without any commercial and delivery impact.
13	Mandatory Spares :
13.1	Wherever the quantities have been indicated for each type, size, thickness, material, radius, range etc., these shall cover all the items supplied and installed and the breakup for these shall be furnished in the bid. In case spares indicated in the list are not applicable to the particular design offered by the bidder, the bidder should offer spares applicable to offered design with quantities generally in line with the approach followed in the mandatory spare list
13.2	Any item which is quoted as "not applicable" in the spare list and is found to be "applicable" at a later date shall be supplied by the Bidder without any commercial implications.
13.3	Each spare shall be clearly marked and labeled on the outside of the packing with its description. When more than one spare part is packed in single case, a general description of the contents shall be shown on the outside of such case and a detailed list enclosed. All cases, containers and other packages must be suitably marked and numbered for the purpose of identification.
14	Nameplates shall be manufactured from stainless steel or aluminium with a matte or satin finish, and engraved with black lettering of a minimum 6 mm height or as per equipment standard whichever is higher.
15	Document approval by BHEL / Customer shall not absolve the supplier of their contractual obligations of completing the work as per specification requirement without any commercial and delivery impact.
16	Equipment must be safe, reliable and easy to maintain at all operating conditions.

File No. PEM-PG0MM(24)/1/2025-PS-PEM-PGI-1 (Computer No. 134626)
Generated from eOffice by Manoj Bhardwaj, ENGINEER(MB)-PG I-1-PS-PEM, ENGINEER, BHARAT HEAVY ELECTRICAL LTD on 07/01/2025 03:44 pm

	TECHNICAL SPECIFICATION & DATA SHEET FOR CONTROL VALVE WITH ACCESSORIES (PNEUMATICALLY OPERATED)	Specification No.: PE-TS-999-145-H104 Rev. No. 00 Date : 30.12.24
	GENERAL TECHNICAL REQUIREMENT	
17	The control valves shall be designed as per the latest version of the following codes/Standards :-	
17.1	Control Valve Sizing :	ISA S-75
17.2	Pressure / Temperature Rating :	ANSI-B16.34
17.3	Seat Leakage :	ANSI/FCI 70.2
17.4	Noise :	IEC 60534-4
17.5	End Connection: Butt Weld	ANSI B16.25
17.6	End Connection: Socket Weld	ANSI B16.11
17.7	End Connection: Flanged End	ANSI B16.5
17.8	End To End Tolerance :	ANSI B16.10
18	The Control valve, Actuator and the accessories opertaing conditions	Continuous operation under an ambient temperature : 0-60°C, Relative Humidity : 0-95%.
19	Valve Selection Criteria :	
19.1	Valve Opening at maximum flow conditions	not greater than 80% of total Valve stem travel
19.2	Valve Opening at minimum flow conditions	not less than 10% of total Valve stem travel
19.3	Stem travel from minimum flow to maximum flow	not less than 50% of total Valve stem travel
19.4	Flow capability	120% of maximum flow
20	Trim requirement for cavitation / flashing service	Anticavitation Trim/ Hardened Trim
21.1	Bonnet joints type	Flanged and Bolted
21.2	Type of Bonnet when fliud temperature is greater than 280 deg. C	Extended Bonnets
22.1	Plug Type	Plug shall be of one-piece construction cast, forged or machined from solid bar stock, BALANCED type
22.2	Plug connection with stem	Plug shall be screwed and pinned to valve stems or shall be integral with the valve stems.
23	Control Valve Guide type	High lift cage guided plugs
24	Trim type	Quick-change
25	Noise abatement method	The noise abatement shall be achieved by valve body and trim design and not by use of silencers except for few cases as per contractor's standard and proven practice subject to employer's approval.
26.1	Scope of Expander/Reducer between valve body and pipe	BHEL
26.2	Scope of Expander/Reducer between valve body diffuser, cartridge, silencer	Bidder
27	Flow action for vacuum application	Above the Seat
28	Painting Details	Refer Specification
29	Packing Details	Refer Specification
30	Valve actuators and stems shall be adequate to handle the unbalanced forces occurring under the specified flow conditions or the maximum differential pressure specified. An adequate allowance for stem force, at least 0.15 Kg/sq.cm. per linear millimeter of seating surface, shall be provided in the selection of the actuator.	

e- Learning package: e- Learning package shall be supplied for CONTROL VALVES	
	These packages shall be installed on the Learning Management Server (LMS) of Power Management Institute (PMI), NTPC located at Noida. The Engineer- In-Charge (EIC) for the e-learning modules shall be from PMI. **1.** The objective of the e-Learning package consisting of courses for erection, commissioning, operation and maintenance of equipment / system as specified

CLAUSE NO.	GENERAL TECHNICAL REQUIREMENTS

above is to facilitate the employees to have first hand information / requirement with respect to above activities for the supplied equipment / system .

2. The bidder shall submit e-learning courses each for erection, commissioning, operation and maintenance of each of the equipment / system supplied as above.

a. The erection course(s) should include instructions on pre-checks, prerequisites, erection strategy, erection procedure etc.

b. The commissioning course(s) should include instructions on pre-commissioning, commissioning, initial operation etc.

c. The operation course(s) should include instructions on the permissive, interlocks, physical check-ups, start-up, shutdown and protections etc.

d. The maintenance course(s) should include instructions on predictive, preventive, breakdown and overhauling.

Depth of coverage of above courses shall be as specified for **"Instruction Manuals"** in above clauses. A literature on caution / safety while handling equipment / system for the above modules shall follow the description of the said equipment /system.

3. The e-Learning packages on equipment / system shall be installed by the vendor and shall be successfully test run in the presence of EIC or representative before acceptance by NTPC. The vendor will also give the master copy in form of Flash Drive/CD/DVD. The respective module for erection & commissioning shall be delivered and successfully test run at least three months before the scheduled start of the corresponding activity at site.

The respective module for operation & maintenance shall be delivered and successfully test run at least three months before scheduled first synchronization of first unit.

4. e-Learning course broad requirements:

a. The courses shall be web based and mobile based Application type. It shall run on all possible versions of web browser like Internet Explorer, Google Chrome, Firefox etc. on Laptop/Desktop and shall be Smartphone/Tablet/Mobile responsive. The Mobile responsive courses shall run on Android, Windows Mobile, Blackberry, iOS etc.

b. The courses shall support liquid/fluid page layout so that the entire screen gets adjusted to PC, Laptop, Smartphone/Mobile, Tablet and any other display devices.

c. Course content text shall be in English language and be associated with a voiceover in English language with Indian accent.

CLAUSE NO.	GENERAL TECHNICAL REQUIREMENTS
	d. Courses shall be SCORM (Sharable Content Object Reference Model) compliant, version 1.2 which is compatible with LMS at PMI. **e.** Each course shall have every physical and functional detail of the equipment / system supplied. **f.** Each of the e-Learning course shall be based on multiple web pages and mobile pages with multiple modules. **g.** There shall be option for self-assessment test after every course. In case the user doesn't opt for self-assessment test the user shall be able to go to the next course. There shall be no restriction in no. of times for repeating the assessments. All correct answers along with the answers marked by the users shall be displayed at the end of test/quiz. **h.** If Java and Flash, as applicable are not available in the system to run the package, then there shall be a prompt message for updation of the same. **i.** Each course shall have a self-running interactive content with navigation buttons containing forward, backward, pause, bookmark and menu options in the course window. **j.** The course shall contain chapter titled 'Introduction/overview' that explains the purpose of the course. **k.** The course content shall contain descriptive text shall be factual, specific, terse, clearly worded, and simply illustrative, so that the user can understand it. **l.** The system shall provide the user with the ability to select the information with a Cursor. **m.** The course menu should contain table of content linked to concerned pages. The user shall be given the capability to access all of the functions available on the system through a menu system. This shall consist of active buttons, which shall control a hierarchy of pull down/pop-up menus. Menu shall appear quickly and exist only while a selection is being made. The user shall be given the capability to position the cursor or pointer on the menu item and use pointer device such as mouse to activate the function. **n.** Every course shall contain the 3D design/drawing/exploded view/360^0 turn around view of the equipment/system, textual description of the equipment/system and its functionality with video (as applicable), animation and audio. **o.** The users shall be able to control audio sound level associated with the courses. **p.** Drawings / text in the courses shall be scalable (Zoom In/ Out). **q.** The user shall have the capability to record a **bookmark** to mark displayed information for later recall, whenever he accesses the same course next time.

File No. PEM-PGOMM(24)/1/2025-PS-PEM-PGI-1 (Computer No. 134626)
Generated from eOffice by Manoj Bhardwaj, ENGINEER(MB)-PG I-1-PS-PEM, ENGINEER, BHARAT HEAVY ELECTRICAL LTD on 07/01/2025 03:44 pm

CLAUSE NO.	GENERAL TECHNICAL REQUIREMENTS
	Notes: 1. e-learning Package of an equipment / system shall include e-learning courses for each of erection, commissioning, operation and maintenance of that equipment / system. 2. e-learning courses on erection, commissioning, operation and maintenance of an equipment / system shall include e-learning lessons/chapters/modules (as required) for erection, commissioning, operation and maintenance respectively of that equipment / system. 3. The vendor shall get the approval of one sample course from EIC before proceeding for further courses.

	TECHNICAL SPECIFICATION & DATA SHEET FOR CONTROL VALVE WITH ACCESSORIES (PNEUMATICALLY OPERATED)	Specification No.: PE-TS-497-145-H104			
		Rev. No. 00			
		Date : 30.12.2024			
SPECIFICATION & DATA SHEET FOR CONTROL VALVE					
A. GENERAL INFORMATION					
1	TAG NUMBER / SERVICE	ASV-8		D/A PEGGING FROM AUX. STEAM HEADER	
2	LOCATION / DUTY	INDOOR		MODULATING	
B. DESIGN CODES & STANDARDS					
3	CODE / STANDARD	REFER SPECIFIC NOTES			
C. TECHNICAL PARAMETERS / DESIGN FEATURES					
4	PIPE SIZE (OD X THK) mm	INLET	219.1 x 6.35	OUTLET	457 x 9.53
5	PIPE MATERIAL INLET / OUTLET	SA 106 GR B		SA 106 GR B	
6	VALVE BODY TYPE / MATERIAL/ SIZE OF VALVE	GLOBE	A217WC6	BIDDER TO FURNISH	
7	GUIDING / NO. OF PORTS / TRIM FORM	CAGE	ONE	LINEAR	
8	CAGE TYPE / CAGE MATERIAL / GUIDE BUSH Material	LO-DB	SS 316 STELLITED	SS 316 STELLITED	
9	MATERIAL: PLUG / STEM / SEAT / YOKE	SS 316 STELLITED	SS 316 STELLITED	SS 316 STELLITED	CARBON STEEL
10	PACKING MATERIAL / NOS / TYPE	GRAFOIL	SINGLE	STANDARD	
11	END CONNECTION / ANSI RATING / BONNET TYPE	BWE	BIDDER TO FURNISH	EXTENDED	
12	VALVE OUTLET VELOCITY	< 150 M/SEC(STEAM)			
13	LEAKAGE CLASS / NOISE LEVEL (dBA)	IV		< 85 dBA	
14	VACUUM SERVICE / ANTI CAVITATION TRIM	NO		NO	
15	ACTUATOR TYPE	PNEUMATIC			
16	TRAVEL TIME FOR OPEN TO CLOSE, CLOSE TO OPEN	LESS THAN 10 SEC			
17	VALVE POSN. ON: ELECTRICAL SIGNAL FAILURE / SUPPLY AIR FAILURE	TO OPEN		STAYPUT	
18	SMART POSITIONER / POSITION LIMIT SWITCH	REQUIRED(PROFIBUS)		NOT REQUIRED	
19	POSITION TRANSMITTER / E/P CONVERTER	PART OF SMART POSITIONER		PART OF SMART POSITIONER	
20	AIR FILTER REGULATOR / AIR LOCK RELAY	REQUIRED		REQUIRED	
21	SOLENOID VALVE / JUNCTION BOX	NOT REQUIRED		REQUIRED	
22	HAND WHEEL (SIDE MOUNTED) / LOCAL POSITIONER INDICATOR	REQUIRED		REQUIRED	
23	SERVICE CONDITIONS	FLOW (T/HR)	INLET PR KG/CM2(A)	OUTLET PR. KG/CM2(A)	TEMP DEG. C
24	CASE-1 7.5 % BMCR	15.5	16	1.65	310
25	CASE-2 15 % BMCR(COLD)	31	16	1.65	310
26	CASE-3 15 % BMCR(HOT)	43.18	16	3.65	310
27	CASE-4 25 % BMCR(COLD)	51.53	16	1.65	310
28	CASE-5 40% COLD (CHECK CASE)	82.5	16	1.65	310
29	MAX SHUT OFF PRESSURE,BODY DESIGN PRESSURE (KG/CM2 (g)) ,TEMP (DEG C)		20	20	350
30	IBR FORM-IIIC	REQUIRED			
31	PROCESS CONDITION	HIGH DP			
32	MODEL OF CONTROL VALVE	BIDDER TO FURNISH			
33	SIZE OF CONTROL VALVE	BIDDER TO FURNISH			
D. GUARANTEED PERFORMANCE REQUIREMENTS					
34	LINEARITY / HYSTERISIS / SENSITIVITY / OVERALL ACCURACY	+/- 1%	+/- 1%	+/- 0.5%	+/- 2%

	TECHNICAL SPECIFICATION & DATA SHEET FOR CONTROL VALVE WITH ACCESSORIES (PNEUMATICALLY OPERATED)	Specification No.: PE-TS-497-145-H104			
		Rev. No. 00			
		Date : 30.12.2024			
SPECIFICATION & DATA SHEET FOR CONTROL VALVE					
A. GENERAL INFORMATION					
1	TAG NUMBER / SERVICE	CRHV-6		D/A PEGGING FROM CRH LINE	
2	LOCATION / DUTY	INDOOR		MODULATING	
B. DESIGN CODES & STANDARDS					
3	CODE / STANDARD	REFER SPECIFIC NOTES			
C. TECHNICAL PARAMETERS / DESIGN FEATURES					
4	PIPE SIZE (OD X THK) mm	INLET	355.6 x 19.05	OUTLET	965 x 40
5	PIPE MATERIAL INLET / OUTLET	SA 106 GR C		SA 106 GR C	
6	VALVE BODY TYPE / MATERIAL/ SIZE OF VALVE	GLOBE	A217WC6	BIDDER TO FURNISH	
7	GUIDING / NO. OF PORTS / TRIM FORM	CAGE	ONE	LINEAR	
8	CAGE TYPE / CAGE MATERIAL / GUIDE BUSH Material	STANDARD	SS 316 STELLITED	SS 316 STELLITED	
9	MATERIAL: PLUG / STEM / SEAT / YOKE	SS 316 STELLITED	SS 316 STELLITED	SS 316 STELLITED	CARBON STEEL
10	PACKING MATERIAL / NOS / TYPE	GRAFOIL	SINGLE	STANDARD	
11	END CONNECTION / ANSI RATING / BONNET TYPE	BWE	BIDDER TO FURNISH	EXTENDED	
12	VALVE OUTLET VELOCITY	< 150 M/SEC(STEAM)			
13	LEAKAGE CLASS / NOISE LEVEL (dBA)	IV		< 85 dBA	
14	VACUUM SERVICE / ANTI CAVITATION TRIM	NO		NO	
15	ACTUATOR TYPE	PNEUMATIC			
16	TRAVEL TIME FOR OPEN TO CLOSE, CLOSE TO OPEN	LESS THAN 10 SEC			
17	VALVE POSN. ON: ELECTRICAL SIGNAL FAILURE / SUPPLY AIR FAILURE	TO CLOSE		STAYPUT	
18	SMART POSITIONER / POSITION LIMIT SWITCH	REQUIRED(PROFIBUS)		NOT REQUIRED	
19	POSITION TRANSMITTER / E/P CONVERTER	PART OF SMART POSITIONER		PART OF SMART POSITIONER	
20	AIR FILTER REGULATOR / AIR LOCK RELAY	REQUIRED		REQUIRED	
21	SOLENOID VALVE / JUNCTION BOX	NOT REQUIRED		REQUIRED	
22	HAND WHEEL (SIDE MOUNTED) / LOCAL POSITIONER INDICATOR	REQUIRED		REQUIRED	
23	SERVICE CONDITIONS	FLOW (T/HR)	INLET PR KG/CM2(A)	OUTLET PR. KG/CM2(A)	TEMP DEG. C
24	CASE-1 65% BYPASS	199.98	39.76	3.65	360
25	CASE-2 15 % BMCR	41.84	20	3.65	355
26	CASE-3 HOUSE LOAD	199.98	39.76	3.65	360
27	CASE-4 START UP	88.44	12	1.65	220
28	MAX SHUT OFF PRESSURE,BODY DESIGN PRESSURE (KG/CM2 (g)), TEMP (DEG C)		76.7	76.7	392
29	IBR FORM-IIIC	REQUIRED			
30	PROCESS CONDITION	HIGH DP			
31	MODEL OF CONTROL VALVE	BIDDER TO FURNISH			
32	SIZE OF CONTROL VALVE	BIDDER TO FURNISH			
D. GUARENTEED PERFORMANCE REQUIREMENTS					
33	LINEARITY / HYSTERISIS / SENSITIVITY / OVERALL ACCURACY	+/- 1%	+/- 1%	+/- 0.5%	+/- 2%

File No. PEM-PG0MM(24)/1/2025-PS-PEM-PGI-1 (Computer No. 134626)

Generated from eOffice by Manoj Bhardwaj, ENGINEER(MB)-PG I-1-PS-PEM, ENGINEER, BHARAT HEAVY ELECTRICAL LTD on 07/01/2025 03:44 pm

	TECHNICAL SPECIFICATION & DATA SHEET FOR CONTROL VALVE WITH ACCESSORIES (PNEUMATICALLY OPERATED)	Specification No.: PE-TS-497-145-H104			
		Rev. No. 00			
		Date : 30.12.2024			
SPECIFICATION & DATA SHEET FOR CONTROL VALVE					
A. GENERAL INFORMATION					
1	TAG NUMBER / SERVICE	CDV-25		LOW LOAD CONDENSATE CONTROL	
2	LOCATION / DUTY	INDOOR		MODULATING	
B. DESIGN CODES & STANDARDS					
3	CODE / STANDARD	REFER SPECIFIC NOTES			
C. TECHNICAL PARAMETERS / DESIGN FEATURES					
4	PIPE SIZE (OD X THK) mm	INLET	273 x 9.27	OUTLET	273 x 9.27
5	PIPE MATERIAL INLET / OUTLET	SA 106 GR B		SA 106 GR B	
6	VALVE BODY TYPE / MATERIAL / SIZE OF VALVE	GLOBE	A216WCB	BIDDER TO FURNISH	
7	GUIDING / NO. OF PORTS / TRIM FORM	CAGE	ONE	EQ %	
8	CAGE TYPE / CAGE MATERIAL / GUIDE BUSH Material	STANDARD	SS 316 STELLITED	SS 316 STELLITED	
9	MATERIAL: PLUG / STEM / SEAT / YOKE	SS 316 STELLITED	SS 316 STELLITED	SS 316 STELLITED	CARBON STEEL
10	PACKING MATERIAL / NOS / TYPE	GRAFOIL	SINGLE	STANDARD	
11	END CONNECTION / ANSI RATING / BONNET TYPE	BWE	BIDDER TO FURNISH	STANDARD	
12	VALVE OUTLET VELOCITY	< 7 M/SEC(WATER)			
13	LEAKAGE CLASS / NOISE LEVEL (dBA)	IV		< 85 dBA	
14	VACUUM SERVICE / ANTI CAVITATION TRIM	NO		NO	
15	ACTUATOR TYPE	PNEUMATIC			
16	TRAVEL TIME FOR OPEN TO CLOSE, CLOSE TO OPEN	LESS THAN 10 SEC			
17	VALVE POSN. ON: ELECTRICAL SIGNAL FAILURE / SUPPLY AIR FAILURE	TO OPEN		STAYPUT	
18	SMART POSITIONER / POSITION LIMIT SWITCH	REQUIRED(HART)		NOT REQUIRED	
19	POSITION TRANSMITTER / E/P CONVERTER	PART OF SMART POSITIONER		PART OF SMART POSITIONER	
20	AIR FILTER REGULATOR / AIR LOCK RELAY	REQUIRED		REQUIRED	
21	SOLENOID VALVE / JUNCTION BOX	NOT REQUIRED		REQUIRED	
22	HAND WHEEL (SIDE MOUNTED) / LOCAL POSITIONER INDICATOR	REQUIRED		REQUIRED	
23	SERVICE CONDITIONS	FLOW (T/HR)	INLET PR KG/CM2(A)	OUTLET PR. KG/CM2(A)	TEMP DEG. C
24	CASE-1 Min. (10% TMCR flow)	127	20	4.9	48.7
25	CASE-2 30% TMCR	483.341	20	9.1	48.7
26	CASE-3 40% TMCR	575.39	20	10.9	48.3
27	CASE-4 50% TMCR	668.54	20	12.6	47.9
28	CASE-5 60% TMCR	784.849	20	14.5	47.7
29	CASE-6 65% TMCR	855.603	20	15	47.5
30	CASE-7 80% TMCR (CHECK CASE)	1024.264	20	18	47.3
31	MAX SHUT OFF PRESSURE,BODY DESIGN PRESSURE (KG/CM2 (g)), TEMP (DEG C)		50	50	55
32	IBR FORM-IIIC	NOT REQUIRED			
33	PROCESS CONDITION				
34	MODEL OF CONTROL VALVE	BIDDER TO FURNISH			
35	SIZE OF CONTROL VALVE	BIDDER TO FURNISH			
D. GUARENTEED PERFORMANCE REQUIREMENTS					
36	LINEARITY / HYSTERISIS / SENSITIVITY / OVERALL ACCURACY	+/- 1%	+/- 1%	+/- 0.5%	+/- 2%

	TECHNICAL SPECIFICATION & DATA SHEET FOR CONTROL VALVE WITH ACCESSORIES (PNEUMATICALLY OPERATED)	Specification No.: PE-TS-497-145-H104			
		Rev. No. 00			
		Date : 30.12.2024			
SPECIFICATION & DATA SHEET FOR CONTROL VALVE					
A. GENERAL INFORMATION					
1	TAG NUMBER / SERVICE	CDV-39		GSC/CEP MIN. FLOW RECIRCULATION	
2	LOCATION / DUTY	INDOOR		MODULATING	
B. DESIGN CODES & STANDARDS					
3	CODE / STANDARD	REFER SPECIFIC NOTES			
C. TECHNICAL PARAMETERS / DESIGN FEATURES					
4	PIPE SIZE (OD X THK) mm	INLET	168.3 x 7.11	OUTLET	168.3 x 7.11
5	PIPE MATERIAL INLET / OUTLET	SA 106 GR B		SA 106 GR B	
6	VALVE BODY TYPE / MATERIAL / SIZE OF VALVE	GLOBE	A217WC9	BIDDER TO FURNISH	
7	GUIDING / NO. OF PORTS / TRIM FORM	CAGE	ONE	EQ %	
8	CAGE TYPE / CAGE MATERIAL / GUIDE BUSH Material	ANTI-CAVITATION	17-4 PH SS	17-4 PH SS	
9	MATERIAL: PLUG / STEM / SEAT / YOKE	17-4 PH SS	17-4 PH SS	17-4 PH SS	CARBON STEEL
10	PACKING MATERIAL / NOS / TYPE	GRAFOIL	DOUBLE	V-CHEVRON	
11	END CONNECTION / ANSI RATING / BONNET TYPE	BWE	BIDDER TO FURNISH	STANDARD	
12	VALVE OUTLET VELOCITY	< 7 M/SEC(WATER)			
13	LEAKAGE CLASS / NOISE LEVEL (dBA)	V		< 85 dBA	
14	VACUUM SERVICE / ANTI CAVITATION TRIM	YES		YES	
15	ACTUATOR TYPE	PNEUMATIC			
16	TRAVEL TIME FOR OPEN TO CLOSE, CLOSE TO OPEN	LESS THAN 10 SEC			
17	VALVE POSN. ON: ELECTRICAL SIGNAL FAILURE / SUPPLY AIR FAILURE	TO OPEN		STAYPUT	
18	SMART POSITIONER / POSITION LIMIT SWITCH	REQUIRED(PROFIBUS)		NOT REQUIRED	
19	POSITION TRANSMITTER / E/P CONVERTER	PART OF SMART POSITIONER		PART OF SMART POSITIONER	
20	AIR FILTER REGULATOR / AIR LOCK RELAY	REQUIRED		REQUIRED	
21	SOLENOID VALVE / JUNCTION BOX	NOT REQUIRED		REQUIRED	
22	HAND WHEEL (SIDE MOUNTED) / LOCAL POSITIONER INDICATOR	REQUIRED		REQUIRED	
23	SERVICE CONDITIONS (LOAD)	FLOW (T/HR)	INLET PR KG/CM2(A)	OUTLET PR. KG/CM2(A)	TEMP DEG. C
24	GSC Min Flow R/C	32.4	20	0.02	47.3
25	Min R/C at Max. speed	324	45.8	0.02	47.3
26	Min R/C at Min. speed	324	20	0.02	47.3
27	MAX SHUT OFF PRESSURE,BODY DESIGN PRESSURE (KG/CM2 (g)), TEMP (DEG C)		50	50/VACCUM	55
28	IBR FORM-IIIC	NOT REQUIRED			
29	PROCESS CONDITION	HIGH DP,CAVITATION			
30	MODEL OF CONTROL VALVE	BIDDER TO FURNISH			
31	SIZE OF CONTROL VALVE	BIDDER TO FURNISH			
D. GUARENTEED PERFORMANCE REQUIREMENTS					
32	LINEARITY / HYSTERISIS / SENSITIVITY / OVERALL ACCURACY	+/- 1%	+/- 1%	+/- 0.5%	+/- 2%

	TECHNICAL SPECIFICATION & DATA SHEET FOR CONTROL VALVE WITH ACCESSORIES (PNEUMATICALLY OPERATED)	Specification No.: PE-TS-497-145-H104			
		Rev. No. 00			
		Date : 30.12.2024			
SPECIFICATION & DATA SHEET FOR CONTROL VALVE					
A. GENERAL INFORMATION					
1	TAG NUMBER / SERVICE	CDV-65,CDV-67,CDV-69		CEP MIN. FLOW RECIRCULATION	
2	LOCATION / DUTY	INDOOR		MODULATING	
B. DESIGN CODES & STANDARDS					
3	CODE / STANDARD	REFER SPECIFIC NOTES			
C. TECHNICAL PARAMETERS / DESIGN FEATURES					
4	PIPE SIZE (OD X THK) mm	INLET	168.3 x 7.11	OUTLET	168.3 x 7.11
5	PIPE MATERIAL INLET / OUTLET	SA 106 GR B		SA 106 GR B	
6	VALVE BODY TYPE / MATERIAL / SIZE OF VALVE	GLOBE	A217WC9	BIDDER TO FURNISH	
7	GUIDING / NO. OF PORTS / TRIM FORM	CAGE	ONE	EQ %	
8	CAGE TYPE / CAGE MATERIAL / GUIDE BUSH Material	ANTI-CAVITATION	17-4 PH SS	17-4 PH SS	
9	MATERIAL: PLUG / STEM / SEAT / YOKE	17-4 PH SS	17-4 PH SS	17-4 PH SS	CARBON STEEL
10	PACKING MATERIAL / NOS / TYPE	GRAFOIL	DOUBLE	V-CHEVRON	
11	END CONNECTION / ANSI RATING / BONNET TYPE	BWE	BIDDER TO FURNISH	STANDARD	
12	VALVE OUTLET VELOCITY	< 7 M/SEC(WATER)			
13	LEAKAGE CLASS / NOISE LEVEL (dBA)	V		< 85 dBA	
14	VACUUM SERVICE / ANTI CAVITATION TRIM	YES		YES	
15	ACTUATOR TYPE	PNEUMATIC			
16	TRAVEL TIME FOR OPEN TO CLOSE, CLOSE TO OPEN	LESS THAN 10 SEC			
17	VALVE POSN. ON: ELECTRICAL SIGNAL FAILURE / SUPPLY AIR FAILURE	TO OPEN		STAYPUT	
18	SMART POSITIONER / POSITION LIMIT SWITCH	REQUIRED(HART)		NOT REQUIRED	
19	POSITION TRANSMITTER / E/P CONVERTER	PART OF SMART POSITIONER		PART OF SMART POSITIONER	
20	AIR FILTER REGULATOR / AIR LOCK RELAY	REQUIRED		REQUIRED	
21	SOLENOID VALVE / JUNCTION BOX	REQUIRED		REQUIRED	
22	HAND WHEEL (SIDE MOUNTED) / LOCAL POSITIONER INDICATOR	REQUIRED		REQUIRED	
23	SERVICE CONDITIONS (LOAD)	FLOW (T/HR)	INLET PR KG/CM2(A)	OUTLET PR. KG/CM2(A)	TEMP DEG. C
24	CEP Min flow R/C	30	21	0.04	47.3
25	Min Recir at Min. speed	168.2	21	0.04	47.3
26	Min Recir at Max. speed	247.4	47	0.04	47.3
27	MAX SHUT OFF PRESSURE,BODY DESIGN PRESSURE (KG/CM2 (g)), TEMP (DEG C)		50	50/VACCUM	55
28	IBR FORM-IIIC	NOT REQUIRED			
29	PROCESS CONDITION	HIGH DP,CAVITATION			
30	MODEL OF CONTROL VALVE	BIDDER TO FURNISH			
31	SIZE OF CONTROL VALVE	BIDDER TO FURNISH			
D. GUARENTEED PERFORMANCE REQUIREMENTS					
32	LINEARITY / HYSTERISIS / SENSITIVITY / OVERALL ACCURACY	+/- 1%	+/- 1%	+/- 0.5%	+/- 2%

	TECHNICAL SPECIFICATION & DATA SHEET FOR CONTROL VALVE WITH ACCESSORIES (PNEUMATICALLY OPERATED)	Specification No.: PE-TS-497-145-H104			
		Rev. No. 00			
		Date : 30.12.2024			
SPECIFICATION & DATA SHEET FOR CONTROL VALVE					
A. GENERAL INFORMATION					
1	TAG NUMBER / SERVICE	CDV-43		EXCESS RETURN TO CST	
2	LOCATION / DUTY	INDOOR		MODULATING	
B. DESIGN CODES & STANDARDS					
3	CODE / STANDARD	REFER SPECIFIC NOTES			
C. TECHNICAL PARAMETERS / DESIGN FEATURES					
4	PIPE SIZE (OD X THK) mm	INLET	219.1 x 8.18	OUTLET	219.1 x 6.35
5	PIPE MATERIAL INLET / OUTLET	SA 106 GR C		SA 106 GR C	
6	VALVE BODY TYPE / MATERIAL / SIZE OF VALVE	GLOBE	A216WCB	BIDDER TO FURNISH	
7	GUIDING / NO. OF PORTS / TRIM FORM	CAGE	ONE	EQ %	
8	CAGE TYPE / CAGE MATERIAL / GUIDE BUSH Material	STANDARD	SS 316 STELLITED	SS 316 STELLITED	
9	MATERIAL: PLUG / STEM / SEAT / YOKE	SS 316 STELLITED	SS 316 STELLITED	SS 316 STELLITED	CARBON STEEL
10	PACKING MATERIAL / NOS / TYPE	GRAFOIL	SINGLE	STANDARD	
11	END CONNECTION / ANSI RATING / BONNET TYPE	BWE	BIDDER TO FURNISH	STANDARD	
12	VALVE OUTLET VELOCITY	< 7 M/SEC(WATER)			
13	LEAKAGE CLASS / NOISE LEVEL (dBA)	V		< 85 dBA	
14	VACUUM SERVICE / ANTI CAVITATION TRIM	NO		NO	
15	ACTUATOR TYPE	PNEUMATIC			
16	TRAVEL TIME FOR OPEN TO CLOSE, CLOSE TO OPEN	LESS THAN 10 SEC			
17	VALVE POSN. ON: ELECTRICAL SIGNAL FAILURE / SUPPLY AIR FAILURE	TO OPEN		STAYPUT	
18	SMART POSITIONER / POSITION LIMIT SWITCH	REQUIRED(PROFIBUS)		NOT REQUIRED	
19	POSITION TRANSMITTER / E/P CONVERTER	PART OF SMART POSITIONER		PART OF SMART POSITIONER	
20	AIR FILTER REGULATOR / AIR LOCK RELAY	REQUIRED		REQUIRED	
21	SOLENOID VALVE / JUNCTION BOX	NOT REQUIRED		REQUIRED	
22	HAND WHEEL (SIDE MOUNTED) / LOCAL POSITIONER INDICATOR	REQUIRED		REQUIRED	
23	SERVICE CONDITIONS (LOAD)	FLOW (T/HR)	INLET PR KG/CM2(A)	OUTLET PR. KG/CM2(A)	TEMP DEG. C
24	Min Excess Condensate Return	34	20	1.8	47.3
25	Min Recir at Min. speed	336	20	1.79	47.3
26	Min Recir at Max. speed	336	47	1.8	47.3
27	Check case	750	20	1.79	47.3
28	MAX SHUT OFF PRESSURE,BODY DESIGN PRESSURE (KG/CM2 (g)), TEMP (DEG C)		50	50	55
29	IBR FORM-IIIC	NOT REQUIRED			
30	PROCESS CONDITION	HIGH DP			
31	MODEL OF CONTROL VALVE	BIDDER TO FURNISH			
32	SIZE OF CONTROL VALVE	BIDDER TO FURNISH			
D. GUARENTEED PERFORMANCE REQUIREMENTS					
33	LINEARITY / HYSTERISIS / SENSITIVITY / OVERALL ACCURACY	+/- 1%	+/- 1%	+/- 0.5%	+/- 2%

	TECHNICAL SPECIFICATION & DATA SHEET FOR CONTROL VALVE WITH ACCESSORIES (PNEUMATICALLY OPERATED)	Specification No.: PE-TS-497-145-H104			
		Rev. No. 00			
		Date : 30.12.2024			
SPECIFICATION & DATA SHEET FOR CONTROL VALVE					
A. GENERAL INFORMATION					
1	TAG NUMBER / SERVICE	CDV-72		CONDENSATE FOR VALVE GLAND SEALING	
2	LOCATION / DUTY	INDOOR		MODULATING	
B. DESIGN CODES & STANDARDS					
3	CODE / STANDARD	REFER SPECIFIC NOTES			
C. TECHNICAL PARAMETERS / DESIGN FEATURES					
4	PIPE SIZE (OD X THK) mm	INLET	60.3 x 5.54	OUTLET	60.3 x 5.54
5	PIPE MATERIAL INLET / OUTLET	SA 106 GR B		SA 106 GR B	
6	VALVE BODY TYPE / MATERIAL / SIZE OF VALVE	GLOBE	A216WCB	BIDDER TO FURNISH	
7	GUIDING / NO. OF PORTS / TRIM FORM	CAGE	ONE	EQ %	
8	CAGE TYPE / CAGE MATERIAL / GUIDE BUSH Material	STANDARD	SS 316 STELLITED	SS 316 STELLITED	
9	MATERIAL: PLUG / STEM / SEAT / YOKE	SS 316 STELLITED	SS 316 STELLITED	SS 316 STELLITED	CARBON STEEL
10	PACKING MATERIAL / NOS / TYPE	GRAFOIL	SINGLE	STANDARD	
11	END CONNECTION / ANSI RATING / BONNET TYPE	BWE	BIDDER TO FURNISH	STANDARD	
12	FLOW ACTION / VALVE OUTLET VELOCITY	< 7 M/SEC(WATER)			
13	LEAKAGE CLASS / NOISE LEVEL (dBA)	V		< 85 dBA	
14	VACUUM SERVICE / ANTI CAVITATION TRIM	NO		NO	
15	ACTUATOR TYPE	PNEUMATIC			
16	TRAVEL TIME FOR OPEN TO CLOSE, CLOSE TO OPEN	LESS THAN 10 SEC			
17	VALVE POSN. ON: ELECTRICAL SIGNAL FAILURE / SUPPLY AIR FAILURE	TO OPEN		STAYPUT	
18	SMART POSITIONER / POSITION LIMIT SWITCH	REQUIRED(PROFIBUS)		NOT REQUIRED	
19	POSITION TRANSMITTER / E/P CONVERTER	PART OF SMART POSITIONER		PART OF SMART POSITIONER	
20	AIR FILTER REGULATOR / AIR LOCK RELAY	REQUIRED		REQUIRED	
21	SOLENOID VALVE / JUNCTION BOX	NOT REQUIRED		REQUIRED	
22	HAND WHEEL (SIDE MOUNTED) / LOCAL POSITIONER INDICATOR	REQUIRED		REQUIRED	
23	SERVICE CONDITIONS (LOAD)	FLOW (T/HR)	INLET PR KG/CM2(A)	OUTLET PR. KG/CM2(A)	TEMP DEG. C
24	Min Condensate to Valve G5	4	20	0.2	47.3
25	MIN.	10	20	2.61	47.3
26	MAX.	10	46.2	2.61	47.3
27	MAX SHUT OFF PRESSURE,BODY DESIGN PRESSURE (KG/CM2 (g)), TEMP (DEG C)		50	50	55
28	IBR FORM-IIIC	NOT REQUIRED			
29	PROCESS CONDITION				
30	MODEL OF CONTROL VALVE	BIDDER TO FURNISH			
31	SIZE OF CONTROL VALVE	BIDDER TO FURNISH			
D. GUARENTEED PERFORMANCE REQUIREMENTS					
32	LINEARITY / HYSTERISIS / SENSITIVITY / OVERALL ACCURACY	+/- 1%	+/- 1%	+/- 0.5%	+/- 2%

	TECHNICAL SPECIFICATION & DATA SHEET FOR CONTROL VALVE WITH ACCESSORIES (PNEUMATICALLY OPERATED)	Specification No.: PE-TS-497-145-H104			
		Rev. No. 00			
		Date : 30.12.2024			
SPECIFICATION & DATA SHEET FOR CONTROL VALVE					
A. GENERAL INFORMATION					
1	TAG NUMBER / SERVICE	CDV-84		CONDENSATE FOR FLASH TANK-B SPRAY	
2	LOCATION / DUTY	INDOOR		ON/OFF	
B. DESIGN CODES & STANDARDS					
3	CODE / STANDARD	REFER SPECIFIC NOTES			
C. TECHNICAL PARAMETERS / DESIGN FEATURES					
4	PIPE SIZE (OD X THK) mm	INLET	33.4 x 4.55	OUTLET	33.4 x 4.55
5	PIPE MATERIAL INLET / OUTLET	SA 106 GR B		SA 106 GR B	
6	VALVE BODY TYPE / MATERIAL / SIZE OF VALVE	GLOBE	A217WC9	BIDDER TO FURNISH	
7	GUIDING / NO. OF PORTS / TRIM FORM	CAGE	ONE	ON-OFF(QUICK OPEN)	
8	CAGE TYPE / CAGE MATERIAL / GUIDE BUSH Material	ANTI-CAVITATION	SS 316 STELLITED	SS 316 STELLITED	
9	MATERIAL: PLUG / STEM / SEAT / YOKE	SS 316 STELLITED	SS 316 STELLITED	440C	CARBON STEEL
10	PACKING MATERIAL / NOS / TYPE	GRAFOIL	DOUBLE	V-CHEVRON	
11	END CONNECTION / ANSI RATING / BONNET TYPE	BWE	BIDDER TO FURNISH	STANDARD	
12	FLOW ACTION / VALVE OUTLET VELOCITY	< 7 M/SEC(WATER)			
13	LEAKAGE CLASS / NOISE LEVEL (dBA)	V		< 85 dBA	
14	VACUUM SERVICE / ANTI CAVITATION TRIM	YES		YES	
15	ACTUATOR TYPE	PNEUMATIC			
16	TRAVEL TIME FOR OPEN TO CLOSE, CLOSE TO OPEN	LESS THAN 10 SEC			
17	VALVE POSN. ON: ELECTRICAL SIGNAL FAILURE / SUPPLY AIR FAILURE	TO OPEN		STAYPUT	
18	SMART POSITIONER / POSITION LIMIT SWITCH	NOT REQUIRED		NOT REQUIRED	
19	POSITION TRANSMITTER / E/P CONVERTER	NOT REQUIRED		NOT REQUIRED	
20	AIR FILTER REGULATOR / AIR LOCK RELAY	REQUIRED		REQUIRED	
21	SOLENOID VALVE / JUNCTION BOX	REQUIRED		REQUIRED	
22	HAND WHEEL (SIDE MOUNTED) / LOCAL POSITIONER INDICATOR	REQUIRED		REQUIRED	
23	SERVICE CONDITIONS (LOAD)	FLOW (T/HR)	INLET PR KG/CM2(A)	OUTLET PR. KG/CM2(A)	TEMP DEG. C
24	MIN. Condensate to FT-B Spray	4	20	0.2	47.3
25	MIN. SPEED	10	20	0.2	47.3
26	MAX. SPEED	10	46.5	0.2	47.3
27	MAX SHUT OFF PRESSURE,BODY DESIGN PRESSURE (KG/CM2 (g)), TEMP (DEG C)		50	50	55
28	IBR FORM-IIIC	NOT REQUIRED			
29	PROCESS CONDITION	CAVITATION, HIGH DP			
30	MODEL OF CONTROL VALVE	BIDDER TO FURNISH			
31	SIZE OF CONTROL VALVE	BIDDER TO FURNISH			
D. GUARENTEED PERFORMANCE REQUIREMENTS					
32	LINEARITY / HYSTERISIS / SENSITIVITY / OVERALL ACCURACY	NA	NA	NA	NA

	TECHNICAL SPECIFICATION & DATA SHEET FOR CONTROL VALVE WITH ACCESSORIES (PNEUMATICALLY OPERATED)	Specification No.: PE-TS-497-145-H104			
		Rev. No. 00			
		Date : 30.12.2024			
SPECIFICATION & DATA SHEET FOR CONTROL VALVE					
A. GENERAL INFORMATION					
1	TAG NUMBER / SERVICE	CDV-94		CONDENSATE FOR UNIT FLASH TANK SPRAY	
2	LOCATION / DUTY	INDOOR		ON/OFF	
B. DESIGN CODES & STANDARDS					
3	CODE / STANDARD	REFER SPECIFIC NOTES			
C. TECHNICAL PARAMETERS / DESIGN FEATURES					
4	PIPE SIZE (OD X THK) mm	INLET	33.4 x 4.55	OUTLET	33.4 x 4.55
5	PIPE MATERIAL INLET / OUTLET	SA 106 GR B		SA 106 GR B	
6	VALVE BODY TYPE / MATERIAL / SIZE OF VALVE	GLOBE	A217WC9	BIDDER TO FURNISH	
7	GUIDING / NO. OF PORTS / TRIM FORM	CAGE	ONE	ON-OFF(QUICK OPEN)	
8	CAGE TYPE / CAGE MATERIAL / GUIDE BUSH Material	ANTI-CAVITATION	440C	SS 316 STELLITED	
9	MATERIAL: PLUG / STEM / SEAT / YOKE	SS 316 STELLITED	SS 316 STELLITED	SS 316 STELLITED	CARBON STEEL
10	PACKING MATERIAL / NOS / TYPE	GRAFOIL	DOUBLE	V-CHEVRON	
11	END CONNECTION / ANSI RATING / BONNET TYPE	BWE	BIDDER TO FURNISH	STANDARD	
12	FLOW ACTION / VALVE OUTLET VELOCITY	< 7 M/SEC(WATER)			
13	LEAKAGE CLASS / NOISE LEVEL (dBA)	V		< 85 dBA	
14	VACUUM SERVICE / ANTI CAVITATION TRIM	YES		YES	
15	ACTUATOR TYPE	PNEUMATIC			
16	TRAVEL TIME FOR OPEN TO CLOSE, CLOSE TO OPEN	LESS THAN 10 SEC			
17	VALVE POSN. ON: ELECTRICAL SIGNAL FAILURE / SUPPLY AIR FAILURE	TO OPEN		STAYPUT	
18	SMART POSITIONER / POSITION LIMIT SWITCH	NOT REQUIRED		NOT REQUIRED	
19	POSITION TRANSMITTER / E/P CONVERTER	NOT REQUIRED		NOT REQUIRED	
20	AIR FILTER REGULATOR / AIR LOCK RELAY	REQUIRED		REQUIRED	
21	SOLENOID VALVE / JUNCTION BOX	REQUIRED		REQUIRED	
22	HAND WHEEL (SIDE MOUNTED) / LOCAL POSITIONER INDICATOR	REQUIRED		REQUIRED	
23	SERVICE CONDITIONS (LOAD)	FLOW (T/HR)	INLET PR KG/CM2(A)	OUTLET PR. KG/CM2(A)	TEMP DEG. C
24	MIN.	4	3	1	33
25	MAX.	10	3	1	33
26	MAX SHUT OFF PRESSURE,BODY DESIGN PRESSURE (KG/CM2 (g)), TEMP (DEG C)	50		50	60
27	IBR FORM-IIIC	NOT REQUIRED			
28	PROCESS CONDITION	HIGH DP			
29	MODEL OF CONTROL VALVE	BIDDER TO FURNISH			
30	SIZE OF CONTROL VALVE	BIDDER TO FURNISH			
D. GUARENTEED PERFORMANCE REQUIREMENTS					
31	LINEARITY / HYSTERISIS / SENSITIVITY / OVERALL ACCURACY	NA	NA	NA	NA

File No. PEM-PG0MM(24)/1/2025-PS-PEM-PGI-1 (Computer No. 134626)

Generated from eOffice by Manoj Bhardwaj, ENGINEER(MB)-PG I-1-PS-PEM, ENGINEER, BHARAT HEAVY ELECTRICAL LTD on 07/01/2025 03:44 pm

	TECHNICAL SPECIFICATION & DATA SHEET FOR CONTROL VALVE WITH ACCESSORIES (PNEUMATICALLY OPERATED)	Specification No.: PE-TS-497-145-H104			
		Rev. No. 00			
		Date : 30.12.2024			
SPECIFICATION & DATA SHEET FOR CONTROL VALVE					
A. GENERAL INFORMATION					
1	TAG NUMBER / SERVICE	DRV-53 & DRV59		HPH-9A/9B NORMAL DRAIN TO HPH-8A/8B	
2	LOCATION / DUTY	INDOOR		MODULATING	
B. DESIGN CODES & STANDARDS					
3	CODE / STANDARD	REFER SPECIFIC NOTES			
C. TECHNICAL PARAMETERS / DESIGN FEATURES					
4	PIPE SIZE (OD X THK) mm	INLET	168.3 x 10.97	OUTLET	168.3 x 10.97
5	PIPE MATERIAL INLET / OUTLET	SA 106 GR C		SA 106 GR C	
6	VALVE BODY TYPE / MATERIAL / SIZE OF VALVE	GLOBE	A217WC6	BIDDER TO FURNISH	
7	GUIDING / NO. OF PORTS / TRIM FORM	CAGE	ONE	LINEAR	
8	CAGE TYPE / CAGE MATERIAL / GUIDE BUSH Material	STANDARD	17-4PH SS	17-4PH SS	
9	MATERIAL: PLUG / STEM/SEAT/YOKE	17-4PH SS	17-4PH SS	17-4PH SS	CARBON STEEL
10	PACKING MATERIAL / NOS / TYPE	GRAFOIL	SINGLE	STANDARD	
11	END CONNECTION / ANSI RATING / BONNET TYPE	BWE	BIDDER TO FURNISH	STANDARD	
12	FLOW ACTION / VALVE OUTLET VELOCITY	< 7 M/SEC(WATER)			
13	LEAKAGE CLASS / NOISE LEVEL (dBA)	IV		< 85 dBA	
14	VACUUM SERVICE / ANTI CAVITATION TRIM	NO		NO	
15	ACTUATOR TYPE	PNEUMATIC			
16	TRAVEL TIME FOR OPEN TO CLOSE, CLOSE TO OPEN	LESS THAN 10 SEC			
17	VALVE POSN. ON: ELECTRICAL SIGNAL FAILURE / SUPPLY AIR FAILURE	TO CLOSE		TO CLOSE	
18	SMART POSITIONER / POSITION LIMIT SWITCH	REQUIRED(PROFIBUS)		NOT REQUIRED	
19	POSITION TRANSMITTER / E/P CONVERTER	PART OF SMART POSITIONER		PART OF SMART POSITIONER	
20	AIR FILTER REGULATOR / AIR LOCK RELAY	REQUIRED		NOT REQUIRED	
21	SOLENOID VALVE / JUNCTION BOX	REQUIRED		REQUIRED	
22	HAND WHEEL (SIDE MOUNTED) / LOCAL POSITIONER INDICATOR	REQUIRED		REQUIRED	
23	SERVICE CONDITIONS (LOAD)	FLOW (T/HR)	INLET PR KG/CM2(A)	OUTLET PR. KG/CM2(A)	TEMP DEG. C
24	40% LOAD	18.5	39.9	27.1	231.4
25	60% LOAD	29.1	57.3	39.1	253.4
26	100%LOAD	67	92.5	63.4	283.5
27	VWO	74.2	98.4	67.2	287.8
28	20% LOAD	11.3	22.5	15.6	199.5
29	MAX SHUT OFF PRESSURE,BODY DESIGN PRESSURE (KG/CM2 (g)), TEMP (DEG C)	110		110	290
30	IBR FORM-IIIC	NOT REQUIRED			
31	PROCESS CONDITION	FLASHING			
32	MODEL OF CONTROL VALVE	BIDDER TO FURNISH			
33	SIZE OF CONTROL VALVE	BIDDER TO FURNISH			
D. GUARENTEED PERFORMANCE REQUIREMENTS					
34	LINEARITY / HYSTERISIS / SENSITIVITY / OVERALL ACCURACY	+/- 1%	+/- 1%	+/- 0.5%	+/- 2%

	TECHNICAL SPECIFICATION & DATA SHEET FOR CONTROL VALVE WITH ACCESSORIES (PNEUMATICALLY OPERATED)	Specification No.: PE-TS-497-145-H104			
		Rev. No. 00			
		Date : 30.12.2024			
SPECIFICATION & DATA SHEET FOR CONTROL VALVE					
A. GENERAL INFORMATION					
1	TAG NUMBER / SERVICE	DRV-56 & DRV-62		HPH-9A/9B ALT. DRAIN TO F/T	
2	LOCATION / DUTY	INDOOR		MODULATING	
B. DESIGN CODES & STANDARDS					
3	CODE / STANDARD	REFER SPECIFIC NOTES			
C. TECHNICAL PARAMETERS / DESIGN FEATURES					
4	PIPE SIZE (OD X THK) mm	INLET	168.3 x 10.97	OUTLET	219.1 x 12.7
5	PIPE MATERIAL INLET / OUTLET	SA 106 GR C		SA 106 GR C	
6	VALVE BODY TYPE / MATERIAL / SIZE OF VALVE	GLOBE	A217WC9	BIDDER TO FURNISH	
7	GUIDING / NO. OF PORTS / TRIM FORM	CAGE	ONE	LINEAR	
8	CAGE TYPE / CAGE MATERIAL / GUIDE BUSH Material	STANDARD	440C	440C	
9	MATERIAL: PLUG / STEM/SEAT/YOKE	440C	440C	440C	CARBON STEEL
10	PACKING MATERIAL / NOS / TYPE	GRAFOIL	DOUBLE	V-CHEVRON	
11	END CONNECTION / ANSI RATING / BONNET TYPE	BWE	BIDDER TO FURNISH	STANDARD	
12	FLOW ACTION / VALVE OUTLET VELOCITY	< 7 M/SEC(WATER)			
13	LEAKAGE CLASS / NOISE LEVEL (dBA)	V		< 85 dBA	
14	VACUUM SERVICE / ANTI CAVITATION TRIM	YES		NO	
15	ACTUATOR TYPE	PNEUMATIC			
16	TRAVEL TIME FOR OPEN TO CLOSE, CLOSE TO OPEN	LESS THAN 10 SEC			
17	VALVE POSN. ON: ELECTRICAL SIGNAL FAILURE / SUPPLY AIR FAILURE	TO OPEN		TO OPEN	
18	SMART POSITIONER / POSITION LIMIT SWITCH	REQUIRED(HART)		NOT REQUIRED	
19	POSITION TRANSMITTER / E/P CONVERTER	PART OF SMART POSITIONER		PART OF SMART POSITIONER	
20	AIR FILTER REGULATOR / AIR LOCK RELAY	REQUIRED		NOT REQUIRED	
21	SOLENOID VALVE / JUNCTION BOX	REQUIRED		REQUIRED	
22	HAND WHEEL (SIDE MOUNTED) / LOCAL POSITIONER INDICATOR	REQUIRED		REQUIRED	
23	SERVICE CONDITIONS (LOAD)	FLOW (T/HR)	INLET PR KG/CM2(A)	OUTLET PR. KG/CM2(A)	TEMP DEG. C
24	40% LOAD	18.5	40.9	0.2	249
25	60% LOAD	29.1	58.1	0.2	271.5
26	100%LOAD	67	93.1	0.2	304.1
27	VWO	74.2	98.8	0.2	308.6
28	20%LOAD	11.3	23.1	0.2	218.1
29	MAX SHUT OFF PRESSURE,BODY DESIGN PRESSURE (KG/CM2 (g)), TEMP (DEG C)	110		110/VACCUM	310
30	IBR FORM-IIIC	NOT REQUIRED			
31	PROCESS CONDITION	FLASHING,HIGH DP			
32	MODEL OF CONTROL VALVE	BIDDER TO FURNISH			
33	SIZE OF CONTROL VALVE	BIDDER TO FURNISH			
D. GUARENTEED PERFORMANCE REQUIREMENTS					
34	LINEARITY / HYSTERISIS / SENSITIVITY / OVERALL ACCURACY	+/- 1%	+/- 1%	+/- 0.5%	+/- 2%

	TECHNICAL SPECIFICATION & DATA SHEET FOR CONTROL VALVE WITH ACCESSORIES (PNEUMATICALLY OPERATED)	Specification No.: PE-TS-497-145-H104			
		Rev. No. 00			
		Date : 30.12.2024			
SPECIFICATION & DATA SHEET FOR CONTROL VALVE					
A. GENERAL INFORMATION					
1	TAG NUMBER / SERVICE	DRV-2 & DRV-8		HPH-8A/8B NORMAL DRAIN TO HPH-7A/7B	
2	LOCATION / DUTY	INDOOR		MODULATING	
B. DESIGN CODES & STANDARDS					
3	CODE / STANDARD	REFER SPECIFIC NOTES			
C. TECHNICAL PARAMETERS / DESIGN FEATURES					
4	PIPE SIZE (OD X THK) mm	INLET	273 x 12.7	OUTLET	273 x 12.7
5	PIPE MATERIAL INLET / OUTLET	SA 106 GR C		SA 106 GR C	
6	VALVE BODY TYPE / MATERIAL / SIZE OF VALVE	GLOBE	A217WC6	BIDDER TO FURNISH	
7	GUIDING / NO. OF PORTS / TRIM FORM	CAGE	ONE	LINEAR	
8	CAGE TYPE / CAGE MATERIAL / GUIDE BUSH Material	STANDARD	17-4PH SS	17-4PH SS	
9	MATERIAL: PLUG / STEM/SEAT/YOKE	17-4PH SS	17-4PH SS	17-4PH SS	CARBON STEEL
10	PACKING MATERIAL / NOS / TYPE	GRAFOIL	SINGLE	STANDARD	
11	END CONNECTION / ANSI RATING / BONNET TYPE	BWE	BIDDER TO FURNISH	STANDARD	
12	FLOW ACTION / VALVE OUTLET VELOCITY	< 7 M/SEC(WATER)			
13	LEAKAGE CLASS / NOISE LEVEL (dBA)	IV		< 85 dBA	
14	VACUUM SERVICE / ANTI CAVITATION TRIM	NO		NO	
15	ACTUATOR TYPE	PNEUMATIC			
16	TRAVEL TIME FOR OPEN TO CLOSE, CLOSE TO OPEN	LESS THAN 10 SEC			
17	VALVE POSN. ON: ELECTRICAL SIGNAL FAILURE / SUPPLY AIR FAILURE	TO CLOSE		TO CLOSE	
18	SMART POSITIONER / POSITION LIMIT SWITCH	REQUIRED(PROFIBUS)		NOT REQUIRED	
19	POSITION TRANSMITTER / E/P CONVERTER	PART OF SMART POSITIONER		PART OF SMART POSITIONER	
20	AIR FILTER REGULATOR / AIR LOCK RELAY	REQUIRED		NOT REQUIRED	
21	SOLENOID VALVE / JUNCTION BOX	REQUIRED		REQUIRED	
22	HAND WHEEL (SIDE MOUNTED) / LOCAL POSITIONER INDICATOR	REQUIRED		REQUIRED	
23	SERVICE CONDITIONS (LOAD)	FLOW (T/HR)	INLET PR KG/CM2(A)	OUTLET PR. KG/CM2(A)	TEMP DEG. C
24	40% LOAD	50.5	27.6	11.46	188.6
25	60% LOAD	80.4	39.5	16.3	205.7
26	100%LOAD	174	63.6	26.2	230.5
27	VWO	190.6	67.3	27.7	233.6
28	20%LOAD	29.3	15.6	6.8	163.3
29	MAX SHUT OFF PRESSURE,BODY DESIGN PRESSURE (KG/CM2 (g)), TEMP (DEG C)	76.7		76.7	240
30	IBR FORM-IIIC	NOT REQUIRED			
31	PROCESS CONDITION	FLASHING			
32	MODEL OF CONTROL VALVE	BIDDER TO FURNISH			
33	SIZE OF CONTROL VALVE	BIDDER TO FURNISH			
D. GUARENTEED PERFORMANCE REQUIREMENTS					
34	LINEARITY / HYSTERISIS / SENSITIVITY / OVERALL ACCURACY	+/- 1%	+/- 1%	+/- 0.5%	+/- 2%

	TECHNICAL SPECIFICATION & DATA SHEET FOR CONTROL VALVE WITH ACCESSORIES (PNEUMATICALLY OPERATED)	Specification No.: PE-TS-497-145-H104			
		Rev. No. 00			
		Date : 30.12.2024			
SPECIFICATION & DATA SHEET FOR CONTROL VALVE					
A. GENERAL INFORMATION					
1	TAG NUMBER / SERVICE	DRV-5 & DRV-11		HPH-8A/8B ALT. DRAIN TO F/T	
2	LOCATION / DUTY	INDOOR		MODULATING	
B. DESIGN CODES & STANDARDS					
3	CODE / STANDARD	REFER SPECIFIC NOTES			
C. TECHNICAL PARAMETERS / DESIGN FEATURES					
4	PIPE SIZE (OD X THK) mm	INLET	273 x 12.7	OUTLET	323.9 x 12.7
5	PIPE MATERIAL INLET / OUTLET	SA 106 GR C		SA 106 GR C	
6	VALVE BODY TYPE / MATERIAL / SIZE OF VALVE	GLOBE	A217WC9	BIDDER TO FURNISH	
7	GUIDING / NO. OF PORTS / TRIM FORM	CAGE	ONE	LINEAR	
8	CAGE TYPE / CAGE MATERIAL / GUIDE BUSH Material	STANDARD	440C	440C	
9	MATERIAL: PLUG / STEM/SEAT/YOKE	440C	440C	440C	CARBON STEEL
10	PACKING MATERIAL / NOS / TYPE	GRAFOIL	DOUBLE	V-CHEVRON	
11	END CONNECTION / ANSI RATING / BONNET TYPE	BWE	BIDDER TO FURNISH	STANDARD	
12	FLOW ACTION / VALVE OUTLET VELOCITY	< 7 M/SEC(WATER)			
13	LEAKAGE CLASS / NOISE LEVEL (dBA)	V		< 85 dBA	
14	VACUUM SERVICE / ANTI CAVITATION TRIM	YES		NO	
15	ACTUATOR TYPE	PNEUMATIC			
16	TRAVEL TIME FOR OPEN TO CLOSE, CLOSE TO OPEN	LESS THAN 10 SEC			
17	VALVE POSN. ON: ELECTRICAL SIGNAL FAILURE / SUPPLY AIR FAILURE	TO OPEN		TO OPEN	
18	SMART POSITIONER / POSITION LIMIT SWITCH	REQUIRED(HART)		NOT REQUIRED	
19	POSITION TRANSMITTER / E/P CONVERTER	PART OF SMART POSITIONER		PART OF SMART POSITIONER	
20	AIR FILTER REGULATOR / AIR LOCK RELAY	REQUIRED		NOT REQUIRED	
21	SOLENOID VALVE / JUNCTION BOX	REQUIRED		REQUIRED	
22	HAND WHEEL (SIDE MOUNTED) / LOCAL POSITIONER INDICATOR	REQUIRED		REQUIRED	
23	SERVICE CONDITIONS (LOAD)	FLOW (T/HR)	INLET PR KG/CM2(A)	OUTLET PR. KG/CM2(A)	TEMP DEG. C
24	40% LOAD	50.5	27.8	0.2	226.8
25	60% LOAD	80.4	39.6	0.2	247.5
26	100%LOAD	174	63.4	0.2	277.7
27	VWO	190.6	67	0.2	281.5
28	20%LOAD	29.3	15.5	0.2	198.2
29	MAX SHUT OFF PRESSURE,BODY DESIGN PRESSURE (KG/CM2 (g)), TEMP (DEG C)	76.7		76.7/VACCUM	285
30	IBR FORM-IIIC	NOT REQUIRED			
31	PROCESS CONDITION	FLASHING,HIGH DP			
32	MODEL OF CONTROL VALVE	BIDDER TO FURNISH			
33	SIZE OF CONTROL VALVE	BIDDER TO FURNISH			
D. GUARENTEED PERFORMANCE REQUIREMENTS					
34	LINEARITY / HYSTERISIS / SENSITIVITY / OVERALL ACCURACY	+/- 1%	+/- 1%	+/- 0.5%	+/- 2%

	TECHNICAL SPECIFICATION & DATA SHEET FOR CONTROL VALVE WITH ACCESSORIES (PNEUMATICALLY OPERATED)	Specification No.: PE-TS-497-145-H104			
		Rev. No. 00			
		Date : 30.12.2024			
SPECIFICATION & DATA SHEET FOR CONTROL VALVE					
A. GENERAL INFORMATION					
1	TAG NUMBER / SERVICE	DRV-15 & DRV-22		HPH-7A/7B NORMAL DRAIN TO DEAERATOR	
2	LOCATION / DUTY	INDOOR		MODULATING	
B. DESIGN CODES & STANDARDS					
3	CODE / STANDARD	REFER SPECIFIC NOTES			
C. TECHNICAL PARAMETERS / DESIGN FEATURES					
4	PIPE SIZE (OD X THK) mm	INLET	273 x 6.35	OUTLET	273 x 12.7
5	PIPE MATERIAL INLET / OUTLET	SA 106 GR B		SA 106 GR B	
6	VALVE BODY TYPE / MATERIAL / SIZE OF VALVE	GLOBE	A217WC6	BIDDER TO FURNISH	
7	GUIDING / NO. OF PORTS / TRIM FORM	CAGE	ONE	LINEAR	
8	CAGE TYPE / CAGE MATERIAL / GUIDE BUSH Material	STANDARD	17-4PH SS	17-4PH SS	
9	MATERIAL: PLUG / STEM/SEAT/YOKE	17-4PH SS	17-4PH SS	17-4PH SS	CARBON STEEL
10	PACKING MATERIAL / NOS / TYPE	GRAFOIL	SINGLE	STANDARD	
11	END CONNECTION / ANSI RATING / BONNET TYPE	BWE	BIDDER TO FURNISH	STANDARD	
12	FLOW ACTION / VALVE OUTLET VELOCITY	< 7 M/SEC(WATER)			
13	LEAKAGE CLASS / NOISE LEVEL (dBA)	IV		< 85 dBA	
14	VACUUM SERVICE / ANTI CAVITATION TRIM	NO		NO	
15	ACTUATOR TYPE	PNEUMATIC			
16	TRAVEL TIME FOR OPEN TO CLOSE, CLOSE TO OPEN	LESS THAN 10 SEC			
17	VALVE POSN. ON: ELECTRICAL SIGNAL FAILURE / SUPPLY AIR FAILURE	TO CLOSE		TO CLOSE	
18	SMART POSITIONER / POSITION LIMIT SWITCH	REQUIRED(PROFIBUS)		NOT REQUIRED	
19	POSITION TRANSMITTER / E/P CONVERTER	PART OF SMART POSITIONER		PART OF SMART POSITIONER	
20	AIR FILTER REGULATOR / AIR LOCK RELAY	REQUIRED		NOT REQUIRED	
21	SOLENOID VALVE / JUNCTION BOX	REQUIRED		REQUIRED	
22	HAND WHEEL (SIDE MOUNTED) / LOCAL POSITIONER INDICATOR	REQUIRED		REQUIRED	
23	SERVICE CONDITIONS (LOAD)	FLOW (T/HR)	INLET PR KG/CM2(A)	OUTLET PR. KG/CM2(A)	TEMP DEG. C
24	40% LOAD	66.1	9.2	6.3	162
25	60% LOAD	105.5	13.8	8.3	175
26	100%LOAD	219.9	23.3	12.2	197.2
27	VWO	239.9	24.8	12.8	200
28	20%LOAD	38.4	3.7	4	140.6
29	MAX SHUT OFF PRESSURE,BODY DESIGN PRESSURE (KG/CM2 (g)), TEMP (DEG C)	32		32	205
30	IBR FORM-IIIC	NOT REQUIRED			
31	PROCESS CONDITION	FLASHING			
32	MODEL OF CONTROL VALVE	BIDDER TO FURNISH			
33	SIZE OF CONTROL VALVE	BIDDER TO FURNISH			
D. GUARENTEED PERFORMANCE REQUIREMENTS					
34	LINEARITY / HYSTERISIS / SENSITIVITY / OVERALL ACCURACY	+/- 1%	+/- 1%	+/- 0.5%	+/- 2%

File No. PEM-PG0MM(24)/1/2025-PS-PEM-PGI-1 (Computer No. 134626)
Generated from eOffice by Manoj Bhardwaj, ENGINEER(MB)-PG I-1-PS-PEM, ENGINEER, BHARAT HEAVY ELECTRICAL LTD on 07/01/2025 03:44 pm

बी एच ई एल BHEL	TECHNICAL SPECIFICATION & DATA SHEET FOR CONTROL VALVE WITH ACCESSORIES (PNEUMATICALLY OPERATED)	Specification No.: PE-TS-497-145-H104			
		Rev. No. 00			
		Date : 30.12.2024			
SPECIFICATION & DATA SHEET FOR CONTROL VALVE					
A. GENERAL INFORMATION					
1	TAG NUMBER / SERVICE	DRV-18 & DRV-25		HPH-7A/7B ALT. DRAIN TO F/T	
2	LOCATION / DUTY	INDOOR		MODULATING	
B. DESIGN CODES & STANDARDS					
3	CODE / STANDARD	REFER SPECIFIC NOTES			
C. TECHNICAL PARAMETERS / DESIGN FEATURES					
4	PIPE SIZE (OD X THK) mm	INLET	273 x 6.35	OUTLET	323.9 x 12.7
5	PIPE MATERIAL INLET / OUTLET	SA 106 GR B		SA 106 GR B	
6	VALVE BODY TYPE / MATERIAL / SIZE OF VALVE	GLOBE	A217WC9	BIDDER TO FURNISH	
7	GUIDING / NO. OF PORTS / TRIM FORM	CAGE	ONE	LINEAR	
8	CAGE TYPE / CAGE MATERIAL / GUIDE BUSH Material	STANDARD	440C	440C	
9	MATERIAL: PLUG / STEM/SEAT/YOKE	440C	440C	440C	CARBON STEEL
10	PACKING MATERIAL / NOS / TYPE	GRAFOIL	DOUBLE	V-CHEVRON	
11	END CONNECTION / ANSI RATING / BONNET TYPE	BWE	BIDDER TO FURNISH	STANDARD	
12	FLOW ACTION / VALVE OUTLET VELOCITY	< 7 M/SEC(WATER)			
13	LEAKAGE CLASS / NOISE LEVEL (dBA)	V		< 85 dBA	
14	VACUUM SERVICE / ANTI CAVITATION TRIM	YES		NO	
15	ACTUATOR TYPE	PNEUMATIC			
16	TRAVEL TIME FOR OPEN TO CLOSE, CLOSE TO OPEN	LESS THAN 10 SEC			
17	VALVE POSN. ON: ELECTRICAL SIGNAL FAILURE / SUPPLY AIR FAILURE	TO OPEN		TO OPEN	
18	SMART POSITIONER / POSITION LIMIT SWITCH	REQUIRED(HART)		NOT REQUIRED	
19	POSITION TRANSMITTER / E/P CONVERTER	PART OF SMART POSITIONER		PART OF SMART POSITIONER	
20	AIR FILTER REGULATOR / AIR LOCK RELAY	REQUIRED		NOT REQUIRED	
21	SOLENOID VALVE / JUNCTION BOX	REQUIRED		REQUIRED	
22	HAND WHEEL (SIDE MOUNTED) / LOCAL POSITIONER INDICATOR	REQUIRED		REQUIRED	
23	SERVICE CONDITIONS (LOAD)	FLOW (T/HR)	INLET PR KG/CM2(A)	OUTLET PR. KG/CM2(A)	TEMP DEG. C
24	40% LOAD	66.1	11.6	0.2	184.3
25	60% LOAD	105.5	16.2	0.2	200.6
26	100%LOAD	219.9	25.9	0.2	224.6
27	VWO	239.9	27.3	0.2	227.6
28	20%LOAD	38.4	6.5	0.2	160.8
29	MAX SHUT OFF PRESSURE,BODY DESIGN PRESSURE (KG/CM2 (g)), TEMP (DEG C)	32		32/VACCUM	230
30	IBR FORM-IIIC	NOT REQUIRED			
31	PROCESS CONDITION	FLASHING,HIGH DP			
32	MODEL OF CONTROL VALVE	BIDDER TO FURNISH			
33	SIZE OF CONTROL VALVE	BIDDER TO FURNISH			
D. GUARENTEED PERFORMANCE REQUIREMENTS					
34	LINEARITY / HYSTERISIS / SENSITIVITY / OVERALL ACCURACY	+/- 1%	+/- 1%	+/- 0.5%	+/- 2%

	TECHNICAL SPECIFICATION & DATA SHEET FOR CONTROL VALVE WITH ACCESSORIES (PNEUMATICALLY OPERATED)	Specification No.: PE-TS-497-145-H104			
		Rev. No. 00			
		Date : 30.12.2024			
SPECIFICATION & DATA SHEET FOR CONTROL VALVE					
A. GENERAL INFORMATION					
1	TAG NUMBER / SERVICE	DRV-82		LPH-5 NORMAL DRAIN TO LPH-4	
2	LOCATION / DUTY	INDOOR		MODULATING	
B. DESIGN CODES & STANDARDS					
3	CODE / STANDARD	REFER SPECIFIC NOTES			
C. TECHNICAL PARAMETERS / DESIGN FEATURES					
4	PIPE SIZE (OD X THK) mm	INLET	168.3 x 7.11	OUTLET	219.1 x 12.7
5	PIPE MATERIAL INLET / OUTLET	SA 106 GR B		SA 106 GR B	
6	VALVE BODY TYPE / MATERIAL / SIZE OF VALVE	GLOBE	A217WC6	BIDDER TO FURNISH	
7	GUIDING / NO. OF PORTS / TRIM FORM	CAGE	ONE	LINEAR	
8	CAGE TYPE / CAGE MATERIAL / GUIDE BUSH Material	STANDARD	17-4PH SS	17-4PH SS	
9	MATERIAL: PLUG / STEM/SEAT/YOKE	17-4PH SS	17-4PH SS	17-4PH SS	CARBON STEEL
10	PACKING MATERIAL / NOS / TYPE	GRAFOIL	DOUBLE	V-CHEVRON	
11	END CONNECTION / ANSI RATING / BONNET TYPE	BWE	BIDDER TO FURNISH	STANDARD	
12	FLOW ACTION / VALVE OUTLET VELOCITY	< 7 M/SEC(WATER)			
13	LEAKAGE CLASS / NOISE LEVEL (dBA)	IV		< 85 dBA	
14	VACUUM SERVICE / ANTI CAVITATION TRIM	YES		NO	
15	ACTUATOR TYPE	PNEUMATIC			
16	TRAVEL TIME FOR OPEN TO CLOSE, CLOSE TO OPEN	LESS THAN 10 SEC			
17	VALVE POSN. ON: ELECTRICAL SIGNAL FAILURE / SUPPLY AIR FAILURE	TO CLOSE		TO CLOSE	
18	SMART POSITIONER / POSITION LIMIT SWITCH	REQUIRED(PROFIBUS)		NOT REQUIRED	
19	POSITION TRANSMITTER / E/P CONVERTER	PART OF SMART POSITIONER		PART OF SMART POSITIONER	
20	AIR FILTER REGULATOR / AIR LOCK RELAY	REQUIRED		NOT REQUIRED	
21	SOLENOID VALVE / JUNCTION BOX	REQUIRED		REQUIRED	
22	HAND WHEEL (SIDE MOUNTED) / LOCAL POSITIONER INDICATOR	REQUIRED		REQUIRED	
23	SERVICE CONDITIONS (LOAD)	FLOW (T/HR)	INLET PR KG/CM2(A)	OUTLET PR. KG/CM2(A)	TEMP DEG. C
24	40% LOAD	19.9	2.7	1.6	112.1
25	60% LOAD	29.7	3.6	2.3	121.5
26	100%LOAD	56.5	5.3	3.3	135.3
27	VWO	60.9	5.5	3.5	137.1
28	20%LOAD	12	1.3	1.2	97.7
29	MAX SHUT OFF PRESSURE,BODY DESIGN PRESSURE (KG/CM2 (g)), TEMP (DEG C)	7		7	145
30	IBR FORM-IIIC	NOT REQUIRED			
31	PROCESS CONDITION	FLASHING			
32	MODEL OF CONTROL VALVE	BIDDER TO FURNISH			
33	SIZE OF CONTROL VALVE	BIDDER TO FURNISH			
D. GUARENTEED PERFORMANCE REQUIREMENTS					
34	LINEARITY / HYSTERISIS / SENSITIVITY / OVERALL ACCURACY	+/- 1%	+/- 1%	+/- 0.5%	+/- 2%

बी एच ई एल BHEL	TECHNICAL SPECIFICATION & DATA SHEET FOR CONTROL VALVE WITH ACCESSORIES (PNEUMATICALLY OPERATED)	Specification No.: PE-TS-497-145-H104			
		Rev. No. 00			
		Date : 30.12.2024			
SPECIFICATION & DATA SHEET FOR CONTROL VALVE					
A. GENERAL INFORMATION					
1	TAG NUMBER / SERVICE	DRV-85		LPH-5 ALT. DRAIN TO F/T	
2	LOCATION / DUTY	INDOOR		MODULATING	
B. DESIGN CODES & STANDARDS					
3	CODE / STANDARD	REFER SPECIFIC NOTES			
C. TECHNICAL PARAMETERS / DESIGN FEATURES					
4	PIPE SIZE (OD X THK) mm	INLET	168.3 x 7.11	OUTLET	219.1 x 12.7
5	PIPE MATERIAL INLET / OUTLET	SA 106 GR B		SA 106 GR B	
6	VALVE BODY TYPE / MATERIAL / SIZE OF VALVE	GLOBE	A217WC9	BIDDER TO FURNISH	
7	GUIDING / NO. OF PORTS / TRIM FORM	CAGE	ONE	LINEAR	
8	CAGE TYPE / CAGE MATERIAL / GUIDE BUSH Material	STANDARD	440C	440C	
9	MATERIAL: PLUG / STEM/SEAT/YOKE	440C	440C	440C	CARBON STEEL
10	PACKING MATERIAL / NOS / TYPE	GRAFOIL	DOUBLE	V-CHEVRON	
11	END CONNECTION / ANSI RATING / BONNET TYPE	BWE	BIDDER TO FURNISH	STANDARD	
12	FLOW ACTION / VALVE OUTLET VELOCITY	< 7 M/SEC(WATER)			
13	LEAKAGE CLASS / NOISE LEVEL (dBA)	V		< 85 dBA	
14	VACUUM SERVICE / ANTI CAVITATION TRIM	YES		NO	
15	ACTUATOR TYPE	PNEUMATIC			
16	TRAVEL TIME FOR OPEN TO CLOSE, CLOSE TO OPEN	LESS THAN 10 SEC			
17	VALVE POSN. ON: ELECTRICAL SIGNAL FAILURE / SUPPLY AIR FAILURE	TO OPEN		TO OPEN	
18	SMART POSITIONER / POSITION LIMIT SWITCH	REQUIRED(HART)		NOT REQUIRED	
19	POSITION TRANSMITTER / E/P CONVERTER	PART OF SMART POSITIONER		PART OF SMART POSITIONER	
20	AIR FILTER REGULATOR / AIR LOCK RELAY	REQUIRED		NOT REQUIRED	
21	SOLENOID VALVE / JUNCTION BOX	REQUIRED		REQUIRED	
22	HAND WHEEL (SIDE MOUNTED) / LOCAL POSITIONER INDICATOR	REQUIRED		REQUIRED	
23	SERVICE CONDITIONS (LOAD)	FLOW (T/HR)	INLET PR KG/CM2(A)	OUTLET PR. KG/CM2(A)	TEMP DEG. C
24	40% LOAD	19.9	3.1	0.2	129.1
25	60% LOAD	29.7	4	0.2	139.7
26	100%LOAD	56.5	5.8	0.2	155.1
27	VWO	60.9	6	0.2	157.1
28	20%LOAD	12	1.8	0.2	112.9
31	MAX SHUT OFF PRESSURE,BODY DESIGN PRESSURE (KG/CM2 (g)), TEMP (DEG C)	7		7 /VACCUM	165
32	IBR FORM-IIIC	NOT REQUIRED			
33	PROCESS CONDITION	FLASHING			
34	MODEL OF CONTROL VALVE	BIDDER TO FURNISH			
35	SIZE OF CONTROL VALVE	BIDDER TO FURNISH			
D. GUARENTEED PERFORMANCE REQUIREMENTS					
36	LINEARITY / HYSTERISIS / SENSITIVITY / OVERALL ACCURACY	+/- 1%	+/- 1%	+/- 0.5%	+/- 2%

	TECHNICAL SPECIFICATION & DATA SHEET FOR CONTROL VALVE WITH ACCESSORIES (PNEUMATICALLY OPERATED)	Specification No.: PE-TS-497-145-H104			
		Rev. No. 00			
		Date : 30.12.2024			
SPECIFICATION & DATA SHEET FOR CONTROL VALVE					
A. GENERAL INFORMATION					
1	TAG NUMBER / SERVICE	DRV-65		LPH-4 NORMAL DRAIN TO LPH-3	
2	LOCATION / DUTY	INDOOR		MODULATING	
B. DESIGN CODES & STANDARDS					
3	CODE / STANDARD	REFER SPECIFIC NOTES			
C. TECHNICAL PARAMETERS / DESIGN FEATURES					
4	PIPE SIZE (OD X THK) mm INLET / OUTLET	INLET	219.1 x 6.35	OUTLET	219.1 x 12.7
5	PIPE MATERIAL INLET / OUTLET	SA 106 GR B		SA 106 GR B	
6	VALVE BODY TYPE / MATERIAL / SIZE OF VALVE	GLOBE	A217WC6	BIDDER TO FURNISH	
7	GUIDING / NO. OF PORTS / TRIM FORM	CAGE	ONE	LINEAR	
8	CAGE TYPE / CAGE MATERIAL / GUIDE BUSH Material	STANDARD	17-4PH SS	17-4PH SS	
9	MATERIAL: PLUG / STEM/SEAT/YOKE	17-4PH SS	17-4PH SS	17-4PH SS	CARBON STEEL
10	PACKING MATERIAL / NOS / TYPE	GRAFOIL	DOUBLE	V-CHEVRON	
11	END CONNECTION / ANSI RATING / BONNET TYPE	BWE	BIDDER TO FURNISH	STANDARD	
12	FLOW ACTION / VALVE OUTLET VELOCITY	< 7 M/SEC(WATER)			
13	LEAKAGE CLASS / NOISE LEVEL (dBA)	IV		< 85 dBA	
14	VACUUM SERVICE / ANTI CAVITATION TRIM	YES		NO	
15	ACTUATOR TYPE	PNEUMATIC			
16	TRAVEL TIME FOR OPEN TO CLOSE, CLOSE TO OPEN	LESS THAN 10 SEC			
17	VALVE POSN. ON: ELECTRICAL SIGNAL FAILURE / SUPPLY AIR FAILURE	TO CLOSE		TO CLOSE	
18	SMART POSITIONER / POSITION LIMIT SWITCH	REQUIRED(PROFIBUS)		NOT REQUIRED	
19	POSITION TRANSMITTER / E/P CONVERTER	PART OF SMART POSITIONER		PART OF SMART POSITIONER	
20	AIR FILTER REGULATOR / AIR LOCK RELAY	REQUIRED		NOT REQUIRED	
21	SOLENOID VALVE / JUNCTION BOX	REQUIRED		REQUIRED	
22	HAND WHEEL (SIDE MOUNTED) / LOCAL POSITIONER INDICATOR	REQUIRED		REQUIRED	
23	SERVICE CONDITIONS (LOAD)	FLOW (T/HR)	INLET PR KG/CM2(A)	OUTLET PR. KG/CM2(A)	TEMP DEG. C
24	40% LOAD	43.4	1.52	0.8	90
25	60% LOAD	64.2	2	1.2	98
26	100%LOAD	119.7	2.81	1.6	109.7
27	VWO	128.7	2.86	1.7	111.3
28	20%LOAD	25.8	0.59	0.7	78.5
31	MAX SHUT OFF PRESSURE,BODY DESIGN PRESSURE (KG/CM2 (g)), TEMP (DEG C)	7		7/VACCUM	115
32	IBR FORM-IIIC	NOT REQUIRED			
33	PROCESS CONDITION	FLASHING			
34	MODEL OF CONTROL VALVE	BIDDER TO FURNISH			
35	SIZE OF CONTROL VALVE	BIDDER TO FURNISH			
D. GUARENTEED PERFORMANCE REQUIREMENTS					
36	LINEARITY / HYSTERISIS / SENSITIVITY / OVERALL ACCURACY	+/- 1%	+/- 1%	+/- 0.5%	+/- 2%

File No. PEM-PG0MM(24)/1/2025-PS-PEM-PGI-1 (Computer No. 134626)
Generated from eOffice by Manoj Bhardwaj, ENGINEER(MB)-PG I-1-PS-PEM, ENGINEER, BHARAT HEAVY ELECTRICAL LTD on 07/01/2025 03:44 pm

	TECHNICAL SPECIFICATION & DATA SHEET FOR CONTROL VALVE WITH ACCESSORIES (PNEUMATICALLY OPERATED)	Specification No.: PE-TS-497-145-H104			
		Rev. No. 00			
		Date : 30.12.2024			
SPECIFICATION & DATA SHEET FOR CONTROL VALVE					
A. GENERAL INFORMATION					
1	TAG NUMBER / SERVICE	DRV-68		LPH-4 ALT. DRAIN TO F/T	
2	LOCATION / DUTY	INDOOR		MODULATING	
B. DESIGN CODES & STANDARDS					
3	CODE / STANDARD	REFER SPECIFIC NOTES			
C. TECHNICAL PARAMETERS / DESIGN FEATURES					
4	PIPE SIZE (OD X THK) mm INLET / OUTLET	INLET	219.1 x 6.35	OUTLET	219.1 x 12.7
5	PIPE MATERIAL INLET / OUTLET	SA 106 GR B		SA 106 GR B	
6	VALVE BODY TYPE / MATERIAL / SIZE OF VALVE	GLOBE	A217WC9	BIDDER TO FURNISH	
7	GUIDING / NO. OF PORTS / TRIM FORM	CAGE	ONE	LINEAR	
8	CAGE TYPE / CAGE MATERIAL / GUIDE BUSH Material	STANDARD	440C	440C	
9	MATERIAL: PLUG / STEM/SEAT/YOKE	440C	440C	440C	CARBON STEEL
10	PACKING MATERIAL / NOS / TYPE	GRAFOIL	DOUBLE	V-CHEVRON	
11	END CONNECTION / ANSI RATING / BONNET TYPE	BWE	BIDDER TO FURNISH	STANDARD	
12	FLOW ACTION / VALVE OUTLET VELOCITY	< 7 M/SEC(WATER)			
13	LEAKAGE CLASS / NOISE LEVEL (dBA)	V		< 85 dBA	
14	VACUUM SERVICE / ANTI CAVITATION TRIM	YES		NO	
15	ACTUATOR TYPE	PNEUMATIC			
16	TRAVEL TIME FOR OPEN TO CLOSE, CLOSE TO OPEN	LESS THAN 10 SEC			
17	VALVE POSN. ON: ELECTRICAL SIGNAL FAILURE / SUPPLY AIR FAILURE	TO OPEN		TO OPEN	
18	SMART POSITIONER / POSITION LIMIT SWITCH	REQUIRED(HART)		NOT REQUIRED	
19	POSITION TRANSMITTER / E/P CONVERTER	PART OF SMART POSITIONER		PART OF SMART POSITIONER	
20	AIR FILTER REGULATOR / AIR LOCK RELAY	REQUIRED		NOT REQUIRED	
21	SOLENOID VALVE / JUNCTION BOX	REQUIRED		REQUIRED	
22	HAND WHEEL (SIDE MOUNTED) / LOCAL POSITIONER INDICATOR	REQUIRED		REQUIRED	
23	SERVICE CONDITIONS (LOAD)	FLOW (T/HR)	INLET PR KG/CM2(A)	OUTLET PR. KG/CM2(A)	TEMP DEG. C
24	40% LOAD	43.4	1.9	0.2	110.8
25	60% LOAD	64.2	2.3	0.2	120.1
26	100%LOAD	119.7	3.2	0.2	133.3
27	VWO	128.7	3.4	0.2	135
28	20%LOAD	25.8	1.1	0.2	96.7
31	MAX SHUT OFF PRESSURE,BODY DESIGN PRESSURE (KG/CM2 (g)), TEMP (DEG C)	7		7/VACCUM	140
32	IBR FORM-IIIC	NOT REQUIRED			
33	PROCESS CONDITION	FLASHING			
34	MODEL OF CONTROL VALVE	BIDDER TO FURNISH			
35	SIZE OF CONTROL VALVE	BIDDER TO FURNISH			
D. GUARENTEED PERFORMANCE REQUIREMENTS					
36	LINEARITY / HYSTERISIS / SENSITIVITY / OVERALL ACCURACY	+/- 1%	+/- 1%	+/- 0.5%	+/- 2%

	TECHNICAL SPECIFICATION & DATA SHEET FOR CONTROL VALVE WITH ACCESSORIES (PNEUMATICALLY OPERATED)	Specification No.: PE-TS-497-145-H104			
		Rev. No. 00			
		Date : 30.12.2024			
SPECIFICATION & DATA SHEET FOR CONTROL VALVE					
A. GENERAL INFORMATION					
1	TAG NUMBER / SERVICE	DRV-77		LPH-3 DRAIN D/S OF DRIP PUMP	
2	LOCATION / DUTY	INDOOR		MODULATING	
B. DESIGN CODES & STANDARDS					
3	CODE / STANDARD	REFER SPECIFIC NOTES			
C. TECHNICAL PARAMETERS / DESIGN FEATURES					
4	PIPE SIZE (OD X THK) mm INLET / OUTLET	INLET	168.3 x 7.11	OUTLET	168.3 x 7.11
5	PIPE MATERIAL INLET / OUTLET	SA 106 GR B		SA 106 GR B	
6	VALVE BODY TYPE / MATERIAL / SIZE OF VALVE	GLOBE	A216WCB	BIDDER TO FURNISH	
7	GUIDING / NO. OF PORTS / TRIM FORM	CAGE	ONE	LINEAR	
8	CAGE TYPE / CAGE MATERIAL / GUIDE BUSH Material	STANDARD	SS 316 STELLITED	SS 316 STELLITED	
9	MATERIAL: PLUG / STEM/SEAT/YOKE	SS 316 STELLITED	SS 316 STELLITED	SS 316 STELLITED	CARBON STEEL
10	PACKING MATERIAL / NOS / TYPE	GRAFOIL	DOUBLE	STANDARD	
11	END CONNECTION / ANSI RATING / BONNET TYPE	BWE	BIDDER TO FURNISH	STANDARD	
12	FLOW ACTION / VALVE OUTLET VELOCITY	< 7 M/SEC(WATER)			
13	LEAKAGE CLASS / NOISE LEVEL (dBA)	IV		< 85 dBA	
14	VACUUM SERVICE / ANTI CAVITATION TRIM	NO		NO	
15	ACTUATOR TYPE	PNEUMATIC			
16	TRAVEL TIME FOR OPEN TO CLOSE, CLOSE TO OPEN	LESS THAN 10 SEC			
17	VALVE POSN. ON: ELECTRICAL SIGNAL FAILURE / SUPPLY AIR FAILURE	TO CLOSE		TO CLOSE	
18	SMART POSITIONER / POSITION LIMIT SWITCH	REQUIRED(PROFIBUS)		NOT REQUIRED	
19	POSITION TRANSMITTER / E/P CONVERTER	PART OF SMART POSITIONER		PART OF SMART POSITIONER	
20	AIR FILTER REGULATOR / AIR LOCK RELAY	REQUIRED		NOT REQUIRED	
21	SOLENOID VALVE / JUNCTION BOX	REQUIRED		REQUIRED	
22	HAND WHEEL (SIDE MOUNTED) / LOCAL POSITIONER INDICATOR	REQUIRED		REQUIRED	
23	SERVICE CONDITIONS (LOAD)	FLOW (T/HR)	INLET PR KG/CM2(A)	OUTLET PR. KG/CM2(A)	TEMP DEG. C
24	40% LOAD	71	26.7	10	88.5
25	60% LOAD	104.6	26.6	12.5	96.2
26	100% LOAD	192.4	25.4	18.3	107.3
27	VWO	206.8	24.9	19.3	108.8
28	20% LOAD	42.5	26.6	7.2	77.5
31	MAX SHUT OFF PRESSURE,BODY DESIGN PRESSURE (KG/CM2 (g)), TEMP (DEG C)	50		50	130
32	IBR FORM-IIIC	NOT REQUIRED			
33	PROCESS CONDITION				
34	MODEL OF CONTROL VALVE	BIDDER TO FURNISH			
35	SIZE OF CONTROL VALVE	BIDDER TO FURNISH			
D. GUARENTEED PERFORMANCE REQUIREMENTS					
36	LINEARITY / HYSTERISIS / SENSITIVITY / OVERALL ACCURACY	+/- 1%	+/- 1%	+/- 0.5%	+/- 2%

	TECHNICAL SPECIFICATION & DATA SHEET FOR CONTROL VALVE WITH ACCESSORIES (PNEUMATICALLY OPERATED)	Specification No.: PE-TS-497-145-H104			
		Rev. No. 00			
		Date : 30.12.2024			
SPECIFICATION & DATA SHEET FOR CONTROL VALVE					
A. GENERAL INFORMATION					
1	TAG NUMBER / SERVICE	DRV-31		LPH-3 ALT. DRAIN TO F/T	
2	LOCATION / DUTY	INDOOR		MODULATING	
B. DESIGN CODES & STANDARDS					
3	CODE / STANDARD	REFER SPECIFIC NOTES			
C. TECHNICAL PARAMETERS / DESIGN FEATURES					
4	PIPE SIZE (OD X THK) mm INLET / OUTLET	INLET	273 x 6.35	OUTLET	323.9 x 12.7
5	PIPE MATERIAL INLET / OUTLET	SA 106 GR B		SA 106 GR B	
6	VALVE BODY TYPE / MATERIAL / SIZE OF VALVE	GLOBE	A217WC9	BIDDER TO FURNISH	
7	GUIDING / NO. OF PORTS / TRIM FORM	CAGE	ONE	LINEAR	
8	CAGE TYPE / CAGE MATERIAL / GUIDE BUSH Material	STANDARD	440C	440C	
9	MATERIAL: PLUG / STEM/SEAT/YOKE	440C	440C	440C	CARBON STEEL
10	PACKING MATERIAL / NOS / TYPE	GRAFOIL	DOUBLE	V-CHEVRON	
11	END CONNECTION / ANSI RATING / BONNET TYPE	BWE	BIDDER TO FURNISH	STANDARD	
12	FLOW ACTION / VALVE OUTLET VELOCITY	< 7 M/SEC(WATER)			
13	LEAKAGE CLASS / NOISE LEVEL (dBA)	V		< 85 dBA	
14	VACUUM SERVICE / ANTI CAVITATION TRIM	YES		NO	
15	ACTUATOR TYPE	PNEUMATIC			
16	TRAVEL TIME FOR OPEN TO CLOSE, CLOSE TO OPEN	LESS THAN 10 SEC			
17	VALVE POSN. ON: ELECTRICAL SIGNAL FAILURE / SUPPLY AIR FAILURE	TO OPEN		TO OPEN	
18	SMART POSITIONER / POSITION LIMIT SWITCH	REQUIRED(HART)		NOT REQUIRED	
19	POSITION TRANSMITTER / E/P CONVERTER	PART OF SMART POSITIONER		PART OF SMART POSITIONER	
20	AIR FILTER REGULATOR / AIR LOCK RELAY	REQUIRED		NOT REQUIRED	
21	SOLENOID VALVE / JUNCTION BOX	REQUIRED		REQUIRED	
22	HAND WHEEL (SIDE MOUNTED) / LOCAL POSITIONER INDICATOR	REQUIRED		REQUIRED	
23	SERVICE CONDITIONS (LOAD)	FLOW (T/HR)	INLET PR KG/CM2(A)	OUTLET PR. KG/CM2(A)	TEMP DEG. C
24	40% LOAD	71	1.1	0.2	88.6
25	60% LOAD	104.6	1.3	0.2	96.2
26	100%LOAD	192.4	1.6	0.2	107.4
27	VWO	206.8	1.6	0.2	108.7
28	20%LOAD	42.5	0.7	0.2	77.6
31	MAX SHUT OFF PRESSURE,BODY DESIGN PRESSURE (KG/CM2 (g)), TEMP (DEG C)	3.5		3.5/VACCUM	115
32	IBR FORM-IIIC	NOT REQUIRED			
33	PROCESS CONDITION	FLASHING			
34	MODEL OF CONTROL VALVE	BIDDER TO FURNISH			
35	SIZE OF CONTROL VALVE	BIDDER TO FURNISH			
D. GUARENTEED PERFORMANCE REQUIREMENTS					
36	LINEARITY / HYSTERISIS / SENSITIVITY / OVERALL ACCURACY	+/- 1%	+/- 1%	+/- 0.5%	+/- 2%

	TECHNICAL SPECIFICATION & DATA SHEET FOR CONTROL VALVE WITH ACCESSORIES (PNEUMATICALLY OPERATED)	Specification No.: PE-TS-497-145-H104			
		Rev. No. 00			
		Date : 30.12.2024			
SPECIFICATION & DATA SHEET FOR CONTROL VALVE					
A. GENERAL INFORMATION					
1	TAG NUMBER / SERVICE	DRV-48		DEAERATOR OVERFLOW TO F/T	
2	LOCATION / DUTY	INDOOR		ON/OFF	
B. DESIGN CODES & STANDARDS					
3	CODE / STANDARD	REFER SPECIFIC NOTES			
C. TECHNICAL PARAMETERS / DESIGN FEATURES					
4	PIPE SIZE (OD X THK) mm INLET / OUTLET	INLET	219.1 x 6.35	OUTLET	323.9 x 9.53
5	PIPE MATERIAL INLET / OUTLET	SA 106 GR C		SA 106 GR C	
6	VALVE BODY TYPE / MATERIAL / SIZE OF VALVE	GLOBE	A217WC9	BIDDER TO FURNISH	
7	GUIDING / NO. OF PORTS / TRIM FORM	CAGE	ONE	ON-OFF(QUICK OPEN)	
8	CAGE TYPE / CAGE MATERIAL / GUIDE BUSH Material	STANDARD	440 C	440 C	
9	MATERIAL: PLUG / STEM/SEAT/YOKE	440 C	440 C	440 C	CARBON STEEL
10	PACKING MATERIAL / NOS / TYPE	GRAFOIL	DOUBLE	V-CHEVRON	
11	END CONNECTION / ANSI RATING / BONNET TYPE	BWE	BIDDER TO FURNISH	STANDARD	
12	FLOW ACTION / VALVE OUTLET VELOCITY	< 7 M/SEC(WATER)			
13	LEAKAGE CLASS / NOISE LEVEL (dBA)	V		< 85 dBA	
14	VACUUM SERVICE / ANTI CAVITATION TRIM	YES		NO	
15	ACTUATOR TYPE	PNEUMATIC			
16	TRAVEL TIME FOR OPEN TO CLOSE, CLOSE TO OPEN	LESS THAN 10 SEC			
17	VALVE POSN. ON: ELECTRICAL SIGNAL FAILURE / SUPPLY AIR FAILURE	TO OPEN		STAYPUT	
18	SMART POSITIONER / POSITION LIMIT SWITCH	NOT REQUIRED		REQUIRED	
19	POSITION TRANSMITTER / E/P CONVERTER	NOT REQUIRED		NOT REQUIRED	
20	AIR FILTER REGULATOR / AIR LOCK RELAY	REQUIRED		REQUIRED	
21	SOLENOID VALVE / JUNCTION BOX	REQUIRED		REQUIRED	
22	HAND WHEEL (SIDE MOUNTED) / LOCAL POSITIONER INDICATOR	REQUIRED		REQUIRED	
23	SERVICE CONDITIONS (LOAD)	FLOW (T/HR)	INLET PR KG/CM2(A)	OUTLET PR. KG/CM2(A)	TEMP DEG. C
24	MAX.-1 10% BMCR	211	14.06	0.2	188.7
25	MAX.-2 10% BMCR	211	5.37	0.2	139.7
26	MAX SHUT OFF PRESSURE,BODY DESIGN PRESSURE (KG/CM2 (g)), TEMP (DEG C)	20		20/VACCUM	200
27	IBR FORM-IIIC	NOT REQUIRED			
28	PROCESS CONDITION	FLASHING			
29	MODEL OF CONTROL VALVE	BIDDER TO FURNISH			
30	SIZE OF CONTROL VALVE	BIDDER TO FURNISH			
D. GUARENTEED PERFORMANCE REQUIREMENTS					
31	LINEARITY / HYSTERISIS / SENSITIVITY / OVERALL ACCURACY	NA	NA	NA	NA

	TECHNICAL SPECIFICATION & DATA SHEET FOR CONTROL VALVE WITH ACCESSORIES (PNEUMATICALLY OPERATED)	Specification No.: PE-TS-497-145-H104			
		Rev. No. 00			
		Date : 30.12.2024			
SPECIFICATION & DATA SHEET FOR CONTROL VALVE					
A. GENERAL INFORMATION					
1	TAG NUMBER / SERVICE	DMV-43		NORMAL DM MU TO HOTWELL	
2	LOCATION / DUTY	INDOOR		MODULATING	
B. DESIGN CODES & STANDARDS					
3	CODE / STANDARD	REFER SPECIFIC NOTES			
C. TECHNICAL PARAMETERS / DESIGN FEATURES					
4	PIPE SIZE (OD X THK) mm INLET / OUTLET	INLET	114.3 x 3.05	OUTLET	114.3 x 3.05
5	PIPE MATERIAL INLET / OUTLET	SA 312 TP 304 (ERW)		SA 312 TP 304 (ERW)	
6	VALVE BODY TYPE / MATERIAL / SIZE OF VALVE	GLOBE	A351CF8M	BIDDER TO FURNISH	
7	GUIDING / NO. OF PORTS / TRIM FORM	CAGE	ONE	EQ %	
8	CAGE TYPE / CAGE MATERIAL / GUIDE BUSH Material	STANDARD	SS316	SS316	
9	MATERIAL: PLUG / STEM/SEAT/YOKE	SS316	SS316	SS316	CARBON STEEL
10	PACKING MATERIAL / NOS / TYPE	GRAFOIL	DOUBLE	V-CHEVRON	
11	END CONNECTION / ANSI RATING / BONNET TYPE	BWE	BIDDER TO FURNISH	STANDARD	
12	FLOW ACTION / VALVE OUTLET VELOCITY	PNEUMATIC			
13	LEAKAGE CLASS / NOISE LEVEL (dBA)	V		< 85 dBA	
14	VACUUM SERVICE / ANTI CAVITATION TRIM	YES		YES	
15	ACTUATOR TYPE	PNEUMATIC WITH SMART POSITIONER (HART)			
16	TRAVEL TIME FOR OPEN TO CLOSE, CLOSE TO OPEN	LESS THAN 10 SEC			
17	VALVE POSN. ON: ELECTRICAL SIGNAL FAILURE / SUPPLY AIR FAILURE	TO OPEN		STAYPUT	
18	SMART POSITIONER / POSITION LIMIT SWITCH	REQUIRED(HART)		NOT REQUIRED	
19	POSITION TRANSMITTER / E/P CONVERTER	PART OF SMART POSITIONER		PART OF SMART POSITIONER	
20	AIR FILTER REGULATOR / AIR LOCK RELAY	REQUIRED		REQUIRED	
21	SOLENOID VALVE / JUNCTION BOX	NOT REQUIRED		REQUIRED	
22	HAND WHEEL (SIDE MOUNTED) / LOCAL POSITIONER INDICATOR	REQUIRED		REQUIRED	
23	SERVICE CONDITIONS (LOAD)	FLOW (T/HR)	INLET PR KG/CM2(A)	OUTLET PR. KG/CM2(A)	TEMP DEG. C
24	MIN(1% MU)	20.672	8.2	0.9	33
25	NORMAL(3% MU)	62.02	6.3	1.1	33
26	MAX(5% MU)	103.36	2.5	1.6	33
27	MIN(.5% MU)	10.34	8.3	0.9	33
31	MAX SHUT OFF PRESSURE,BODY DESIGN PRESSURE (KG/CM2 (g)), TEMP (DEG C)	12		12/VACCUM	50
32	IBR FORM-IIIC				
33	PROCESS CONDITION				
34	MODEL OF CONTROL VALVE	BIDDER TO FURNISH			
35	SIZE OF CONTROL VALVE	BIDDER TO FURNISH			
D. GUARENTEED PERFORMANCE REQUIREMENTS					
36	LINEARITY / HYSTERISIS / SENSITIVITY / OVERALL ACCURACY	+/- 1%	+/- 1%	+/- 0.5%	+/- 2%

	TECHNICAL SPECIFICATION & DATA SHEET FOR CONTROL VALVE WITH ACCESSORIES (PNEUMATICALLY OPERATED)	Specification No.: PE-TS-497-145-H104			
		Rev. No. 00			
		Date : 30.12.2024			
SPECIFICATION & DATA SHEET FOR CONTROL VALVE					
A. GENERAL INFORMATION					
1	TAG NUMBER / SERVICE	DMV-78		EMERGENCY DM MU TO HOTWELL	
2	LOCATION / DUTY	INDOOR		MODULATING	
B. DESIGN CODES & STANDARDS					
3	CODE / STANDARD	REFER SPECIFIC NOTES			
C. TECHNICAL PARAMETERS / DESIGN FEATURES					
4	PIPE SIZE (OD X THK) mm INLET / OUTLET	INLET	219.1 x 3.76	OUTLET	219.1 x 3.76
5	PIPE MATERIAL INLET / OUTLET	SA 312 TP 304 (ERW)		SA 312 TP 304 (ERW)	
6	VALVE BODY TYPE / MATERIAL / SIZE OF VALVE	GLOBE	A351CF8M	BIDDER TO FURNISH	
7	GUIDING / NO. OF PORTS / TRIM FORM	CAGE	ONE	EQ %	
8	CAGE TYPE / CAGE MATERIAL / GUIDE BUSH Material	STANDARD	SS316	SS316	
9	MATERIAL: PLUG / STEM/SEAT/YOKE	SS316	SS316	SS316	CARBON STEEL
10	PACKING MATERIAL / NOS / TYPE	GRAFOIL	DOUBLE	V-CHEVRON	
11	END CONNECTION / ANSI RATING / BONNET TYPE	BWE	BIDDER TO FURNISH	STANDARD	
12	FLOW ACTION / VALVE OUTLET VELOCITY	< 7 M/SEC(WATER)			
13	LEAKAGE CLASS / NOISE LEVEL (dBA)	V		< 85 dBA	
14	VACUUM SERVICE / ANTI CAVITATION TRIM	YES		YES	
15	ACTUATOR TYPE	PNEUMATIC			
16	TRAVEL TIME FOR OPEN TO CLOSE, CLOSE TO OPEN	LESS THAN 10 SEC			
17	VALVE POSN. ON: ELECTRICAL SIGNAL FAILURE / SUPPLY AIR FAILURE	STAYPUT		STAYPUT	
18	SMART POSITIONER / POSITION LIMIT SWITCH	REQUIRED(HART)		NOT REQUIRED	
19	POSITION TRANSMITTER / E/P CONVERTER	PART OF SMART POSITIONER		PART OF SMART POSITIONER	
20	AIR FILTER REGULATOR / AIR LOCK RELAY	REQUIRED		REQUIRED	
21	SOLENOID VALVE / JUNCTION BOX	NOT REQUIRED		REQUIRED	
22	HAND WHEEL (SIDE MOUNTED) / LOCAL POSITIONER INDICATOR	REQUIRED		REQUIRED	
23	SERVICE CONDITIONS (LOAD)	FLOW (T/HR)	INLET PR KG/CM2(A)	OUTLET PR. KG/CM2(A)	TEMP DEG. C
24	MIN(5% MU)	105.5	7.6	0.9	33
25	NORMAL(10% MU)	211	6.2	0.9	33
26	MAX(15% MU)	316.5	4.6	1	33
31	MAX SHUT OFF PRESSURE,BODY DESIGN PRESSURE (KG/CM2 (g)), TEMP (DEG C)	12		12/VACCUM	50
32	IBR FORM-IIIC				
33	PROCESS CONDITION				
34	MODEL OF CONTROL VALVE	BIDDER TO FURNISH			
35	SIZE OF CONTROL VALVE	BIDDER TO FURNISH			
D. GUARENTEED PERFORMANCE REQUIREMENTS					
36	LINEARITY / HYSTERISIS / SENSITIVITY / OVERALL ACCURACY	+/- 1%	+/- 1%	+/- 0.5%	+/- 2%

	TECHNICAL SPECIFICATION & DATA SHEET FOR CONTROL VALVE WITH ACCESSORIES (PNEUMATICALLY OPERATED)	Specification No.: PE-TS-497-145-H104			
		Rev. No. 00			
		Date : 30.12.2024			
SPECIFICATION & DATA SHEET FOR CONTROL VALVE					
A. GENERAL INFORMATION					
1	TAG NUMBER / SERVICE	DMCWSG8		DMCW SYSYTEM FOR SG AUX'S	
2	LOCATION / DUTY	INDOOR		MODULATING	
B. DESIGN CODES & STANDARDS					
3	CODE / STANDARD	REFER SPECIFIC NOTES			
C. TECHNICAL PARAMETERS / DESIGN FEATURES					
4	PIPE SIZE (OD X THK) mm INLET / OUTLET	INLET	457.0X6.0	OUTLET	457.0X6.0
5	PIPE MATERIAL INLET / OUTLET	CS IS 2062		CS IS 2062	
6	VALVE BODY TYPE / MATERIAL / SIZE OF VALVE	GLOBE	A216WCB	BIDDER TO FURNISH	
7	GUIDING / NO. OF PORTS / TRIM FORM	CAGE	ONE	LINEAR	
8	CAGE TYPE / CAGE MATERIAL / GUIDE BUSH Material	STANDARD	SS 316 STELLITED	SS 316 STELLITED	
9	MATERIAL: PLUG / STEM/SEAT/YOKE	SS 316 STELLITED	SS 316 STELLITED	SS 316 STELLITED	CARBON STEEL
10	PACKING MATERIAL / NOS / TYPE	GRAFOIL	SINGLE	STANDARD	
11	END CONNECTION / ANSI RATING / BONNET TYPE	BWE	BIDDER TO FURNISH	STANDARD	
12	FLOW ACTION / VALVE OUTLET VELOCITY	< 7 M/SEC(WATER)			
13	LEAKAGE CLASS / NOISE LEVEL (dBA)	IV		< 85 dBA	
14	VACUUM SERVICE / ANTI CAVITATION TRIM	NO		NO	
15	ACTUATOR TYPE	PNEUMATIC			
16	TRAVEL TIME FOR OPEN TO CLOSE, CLOSE TO OPEN	LESS THAN 10 SEC			
17	VALVE POSN. ON: ELECTRICAL SIGNAL FAILURE / SUPPLY AIR FAILURE	TO CLOSE		STAYPUT	
18	SMART POSITIONER / POSITION LIMIT SWITCH	REQUIRED(PROFIBUS)		NOT REQUIRED	
19	POSITION TRANSMITTER / E/P CONVERTER	PART OF SMART POSITIONER		PART OF SMART POSITIONER	
20	AIR FILTER REGULATOR / AIR LOCK RELAY	REQUIRED		REQUIRED	
21	SOLENOID VALVE / JUNCTION BOX	REQUIRED		REQUIRED	
22	HAND WHEEL (SIDE MOUNTED) / LOCAL POSITIONER INDICATOR	REQUIRED		REQUIRED	
23	SERVICE CONDITIONS (LOAD)	FLOW (T/HR)	INLET PR KG/CM2(A)	OUTLET PR. KG/CM2(A)	TEMP DEG. C
24	NORMAL	1129	7.1	4.3	38
25	MINIMUM	0	7.1	4.3	38
26	MAX SHUT OFF PRESSURE,BODY DESIGN PRESSURE (KG/CM2 (g)), TEMP (DEG C)	10			60
27	IBR FORM-IIIC				
28	PROCESS CONDITION	HIGH DP			
29	MODEL OF CONTROL VALVE	BIDDER TO FURNISH			
30	SIZE OF CONTROL VALVE	BIDDER TO FURNISH			
D. GUARENTEED PERFORMANCE REQUIREMENTS					
31	LINEARITY / HYSTERISIS / SENSITIVITY / OVERALL ACCURACY	+/- 1%	+/- 1%	+/- 0.5%	+/- 2%

File No. PEM-PG0MM(24)/1/2025-PS-PEM-PGI-1 (Computer No. 134626)
Generated from eOffice by Manoj Bhardwaj, ENGINEER(MB)-PG I-1-PS-PEM, ENGINEER, BHARAT HEAVY ELECTRICAL LTD on 07/01/2025 03:44 pm

	TECHNICAL SPECIFICATION & DATA SHEET FOR CONTROL VALVE WITH ACCESSORIES (PNEUMATICALLY OPERATED)	Specification No.: PE-TS-497-145-H104			
		Rev. No. 00			
		Date : 30.12.2024			
SPECIFICATION & DATA SHEET FOR CONTROL VALVE					
A. GENERAL INFORMATION					
1	TAG NUMBER / SERVICE	DMCW18		DMCW SYSYTEM FOR TG AUX'S	
2	LOCATION / DUTY	INDOOR		MODULATING	
B. DESIGN CODES & STANDARDS					
3	CODE / STANDARD	REFER SPECIFIC NOTES			
C. TECHNICAL PARAMETERS / DESIGN FEATURES					
4	PIPE SIZE (OD X THK) mm INLET / OUTLET	INLET	406.4X6.0	OUTLET	406.4X6.0
5	PIPE MATERIAL INLET / OUTLET	CS IS 2062		CS IS 2062	
6	VALVE BODY TYPE / MATERIAL / SIZE OF VALVE	GLOBE	A216WCB	BIDDER TO FURNISH	
7	GUIDING / NO. OF PORTS / TRIM FORM	CAGE	ONE	LINEAR	
8	CAGE TYPE / CAGE MATERIAL / GUIDE BUSH Material	STANDARD	SS 316 STELLITED	SS 316 STELLITED	
9	MATERIAL: PLUG / STEM/SEAT/YOKE	SS 316 STELLITED	SS 316 STELLITED	SS 316 STELLITED	CARBON STEEL
10	PACKING MATERIAL / NOS / TYPE	GRAFOIL	SINGLE	STANDARD	
11	END CONNECTION / ANSI RATING / BONNET TYPE	BWE	BIDDER TO FURNISH	STANDARD	
12	FLOW ACTION / VALVE OUTLET VELOCITY	< 7 M/SEC(WATER)			
13	LEAKAGE CLASS / NOISE LEVEL (dBA)	IV		< 85 dBA	
14	VACUUM SERVICE / ANTI CAVITATION TRIM	NO		NO	
15	ACTUATOR TYPE	PNEUMATIC			
16	TRAVEL TIME FOR OPEN TO CLOSE, CLOSE TO OPEN	LESS THAN 10 SEC			
17	VALVE POSN. ON: ELECTRICAL SIGNAL FAILURE / SUPPLY AIR FAILURE	TO CLOSE		STAYPUT	
18	SMART POSITIONER / POSITION LIMIT SWITCH	REQUIRED(PROFIBUS)		NOT REQUIRED	
19	POSITION TRANSMITTER / E/P CONVERTER	PART OF SMART POSITIONER		PART OF SMART POSITIONER	
20	AIR FILTER REGULATOR / AIR LOCK RELAY	REQUIRED		REQUIRED	
21	SOLENOID VALVE / JUNCTION BOX	REQUIRED		REQUIRED	
22	HAND WHEEL (SIDE MOUNTED) / LOCAL POSITIONER INDICATOR	REQUIRED		REQUIRED	
23	SERVICE CONDITIONS (LOAD)	FLOW (T/HR)	INLET PR KG/CM2(A)	OUTLET PR. KG/CM2(A)	TEMP DEG. C
24	NORMAL	999	5	2.7	38
25	MIMIMUM	0	5	2.7	38
26	MAX SHUT OFF PRESSURE,BODY DESIGN PRESSURE (KG/CM2 (g)), TEMP (DEG C)	10			60
27	IBR FORM-IIIC				
28	PROCESS CONDITION	HIGH DP			
29	MODEL OF CONTROL VALVE	BIDDER TO FURNISH			
30	SIZE OF CONTROL VALVE	BIDDER TO FURNISH			
D. GUARENTEED PERFORMANCE REQUIREMENTS					
31	LINEARITY / HYSTERISIS / SENSITIVITY / OVERALL ACCURACY	+/- 1%	+/- 1%	+/- 0.5%	+/- 2%

File No. PEM-PG0MM(24)/1/2025-PS-PEM-PGI-1 (Computer No. 134626)
Generated from eOffice by Manoj Bhardwaj, ENGINEER(MB)-PG I-1-PS-PEM, ENGINEER, BHARAT HEAVY ELECTRICAL LTD on 07/01/2025 03:44 pm

बी एच ई एल BHEL	TECHNICAL SPECIFICATION & DATA SHEET FOR CONTROL VALVE WITH ACCESSORIES (PNEUMATICALLY OPERATED)	Specification No.: PE-TS-497-145-H104
		Rev. No. 00
		Date : 30.12.2024

DATA SHEET FOR CONTROL VALVE ACCESSORIES TO BE CONFIRMED BY BIDDER

1	SMART POSITIONER	SMART POSITIONER (HART / PROFIBUS). Refer detailed Specification			
2	AFR CASING MATERIAL / FILTER SIZE / INLET - OUTLET PRESSURE (KG/CM2) / OUTPUT GAUGE	SINTERED BRONZE	5 MICRON	5.0 - 8.0	REQUIRED
3	AIR LOCK INLET-OUTLET PRESSURE (KG/CM2) / AFR AUTO DRAIN FEATURE	5.0 - 8.0		REQUIRED	
4	AIR LOCK RESET TYPE / VENT PLUG	AUTO		REQUIRED	
5	LIMIT SWITCH POSITION NO. / CONTACT TYPE / ENCLOSURE CLASS /CONTACT RATING	4(2-OPEN, 2-CLOSE)	4 X SPDT	IP-65	0.5A,24 V DC / 5A,230 V AC
6	SOV BODY MATERIAL / OPERATION / VOLTAGE / TYPE	BRASS	STAYPUT	24 V DC	3 WAY (UNIVERSAL OPERATION TYPE)
7	SOV COIL INSULATION CLASS / ENCLOSURE CLASS	H		IP-65	
8	JB MATERIAL / NO OF WAYS / ENCLOSURE CLASS	4 mm thick FRP	36	IP-65	
9	JB CABLE GLAND TYPE / MATERIAL / QUANTITY (PER CV) / JB TB TYPE	YES- DOUBLE COMPRESSION TYPE	Ni-PLATED	TWO	CAGE CLAMP
10	HAND WHEEL MOUNTING POSITION / POSITION INDICATOR / LOCAL POSITION INDICATOR	SIDE MOUNTED	REQUIRED	REQUIRED	
11	TUBING (ADDITIONAL TO INTEGRAL TUBING) /MATERIAL / SIZE / LENGTH IN METRES (PER CV)	REQUIRED	SS 316	1/4 "	12
12	FITTINGS AS PER HOOK UP DIAGRAM / FOR CONNECTION TO AIR FILTER REGULATOR	REQUIRED		REQUIRED	
13	FITTINGS FOR CONNECTION TO AIR LOCK RELAY / FOR CONNECTION TO IA HEADER ISOLATION VALVE	REQUIRED		REQUIRED	
14	EQUAL TEEs / CONNECTORS	REQUIRED		REQUIRED	
15	VALVE DIAGNOSTIC AND CONFIGURATION SOFTWARE	REQUIRED		REQUIRED	

	MANUFACTURER/BIDDER/ SUPPLIER NAME & ADDRESS	STANDARD QUALITY PLAN		SPEC. NO : --	DATE: --
		CUSTOMER :--		QP NO.: PE-QP-999-145-H 006 REV 00	DATE: 04.01.2024
		PROJECT: --		PO NO.: --	DATE: --
		ITEM: CONTROL VALVE	SYSTEM: S&CE		SHEET 1 OF 8

SL NO.	COMPONENT & OPERATIONS	CHARACTERISTIC CHECKED	CATE GORY	TYPE OF CHECK	QUANTUM OF CHECK		REFERENCE DOCUMENT	ACCEPTANCE NORMS	FORMAT OF RECORD	AGENCY				REMARKS
	2	3	4	5	6		7	8	9	*	**			
					M	B/C				D	M	B	C	
1.0	**RAW MATERIAL**													
1.1	Body & Bonnet castings/forgings ,plug,valve stem, seat ring/cage	Physical, Chemical properties	MA	Physical, Chemical tests	100%	10%	Approved drg/ datasheet	Approved drg/data sheet	Test Certificate	√	P/ W	V		
		Heat Treatment	MA	Review of H.T. Certificate	100%	10%	Approved drg/ datasheet	Approved drg/data sheet	Test Certificate	√	P/ W	V		1. Applicable for body /bonnet only 2. IBR certificate(if applicable) to be verified.
		Internal quality of castings/forgings	MA	RT for Body & UT for Bonnet	100%	10%	ASME B 16.34	ASME B 16.34	Test Report/ Film	√	P/ W	V		Applicable for body and bonnet for rating ANSI 900 and above.
		Surface Quality	MA	1.Visual	100%	10%	ANSI/ MSS-SP-55	ANSI/ MSS-SP-55	Inspection Report	√	P/ W	V		Applicable for body/bonnet only.
		Pressure Test for shell	MA	Hyd. Test	100%	10%	ISA-S-75.19	ISA-S-75.19	Inspection Report	√	P/ W	V		For Body and Bonnet after machining.

BHEL						BIDDER/ SUPPLIER		FOR CUSTOMER REVIEW & APPROVAL			
ENGINEERING			QUALITY			Sign & Date		Doc No:			
	Name	Sign & Date		Name	Sign & Date	Seal			Name	Sign & Date	Seal
Prepared by:	CHETAN MALIK		Checked by:	SUMAN NAKWAL				Reviewed by:			
Reviewed by:	SURESH CHAND SHARMA		Reviewed by:	HARISH KUMAR				Approved by:			
Approved by:	GIRISH BHAGCHANDANI										

File No. PEM-PG0MM(24)/1/2025-PS-PEM-PGI-1 (Computer No. 134626)

Generated from eOffice by Manoj Bhardwaj, ENGINEER(MB)-PG I-1-PS-PEM, ENGINEER, BHARAT HEAVY ELECTRICAL LTD on 07/01/2025 03:44 pm

	MANUFACTURER/BIDDER/ SUPPLIER NAME & ADDRESS	STANDARD QUALITY PLAN		SPEC. NO : --	DATE: --
		CUSTOMER :--		QP NO.: PE-QP-999-145-H 006 REV 00	DATE: 04.01.2024
		PROJECT: --		PO NO.: --	DATE: --
		ITEM: CONTROL VALVE	SYSTEM: S&CE		SHEET 2 OF 8

SL NO.	COMPONENT & OPERATIONS	CHARACTERISTIC CHECKED	CATE GORY	TYPE OF CHECK	QUANTUM OF CHECK		REFERENCE DOCUMENT	ACCEPTANCE NORMS	FORMAT OF RECORD	AGENCY				REMARKS
	2	3	4	5	6		7	8	9	*	**			
					M	B/C				D	M	B	C	
1.2	Diaphragm	Surface Quality	MA	Visual	100%	10%	Mfr. standard	COC./Test Certificate	COC/Test Certificate	√	P/V	V		
		Hardness	MA	Measurement	100%	10%	Mfr. standard	COC/Test Certificate	COC/ Test Certificate	√	P/V	V		
		Endurance/ Life cycle	MA	Cyclic Test 10,000 cycles	One/ type	One/ type	Mfr. standard	No damage	COC/Test Certificate	√	P/V	V		
1.3	Spring	Composition	MA	Chemical-Analysis	One Sample/ Heat	One Sample/ Heat	Mfr. Standard	COC/Test Certificate	COC/Test Certificate	√	P/V	V		
		Mech. Properties	MA	Mech. Test	One Sample/ Heat	One Sample/ Heat	Mfr. Standard	COC/Test Certificate	COC/Test Certificate	√	P/V	V		
		Performance	MA	1.Stiffness Ratio	100%	10%	Mfr. standard	COC/Test Certificate	COC/Test Certificate	√	P/V	V		
				2.Scragging	100%	10%	Mfr. standard	COC/Test Certificate	COC/Test Certificate	√	P/V	V		
				3.Cyclic Test (Endurance)	One/ type	One/ type	Mfr. standard	COC/Test Certificate	COC/Test Certificate	√	P/V	V		

BHEL						BIDDER/ SUPPLIER		FOR CUSTOMER REVIEW & APPROVAL			
ENGINEERING			QUALITY			Sign & Date		Doc No:			
	Name	Sign & Date		Name	Sign & Date	Seal			Name	Sign & Date	Seal
Prepared by:	CHETAN MALIK		Checked by:	SUMAN NAKWAL				Reviewed by:			
Reviewed by:	SURESH CHAND SHARMA		Reviewed by:	HARISH KUMAR				Approved by:			
Approved by:	GIRISH BHAGCHANDANI										

File No. PEM-PG0MM(24)/1/2025-PS-PEM-PGI-1 (Computer No. 134626)

Generated from eOffice by Manoj Bhardwaj, ENGINEER(MB)-PG I-1-PS-PEM, ENGINEER, BHARAT HEAVY ELECTRICAL LTD on 07/01/2025 03:44 pm

	MANUFACTURER/BIDDER/ SUPPLIER NAME & ADDRESS	STANDARD QUALITY PLAN	SPEC. NO : --	DATE: --
		CUSTOMER :--	QP NO.: PE-QP-999-145-H 006 REV 00	DATE: 04.01.2024
		PROJECT: --	PO NO.: --	DATE: --
		ITEM: CONTROL VALVE / SYSTEM: S&CE		SHEET 3 OF 8

SL NO.	COMPONENT & OPERATIONS	CHARACTERISTIC CHECKED	CATE GORY	TYPE OF CHECK	QUANTUM OF CHECK		REFERENCE DOCUMENT	ACCEPTANCE NORMS	FORMAT OF RECORD	AGENCY				REMARKS
	2	3	4	5	6		7	8	9	*	**			
					M	B/C				D	M	B	C	
				4. Dimension (Measurement)	One sample/ Lot	One sample /Lot	Mfr. Standard	COC/Test Certificate	COC/Test Certificate	√	P/ V	V		
2.0	**IN PROCESS INSPECTION**													
2.1	After machining, i, Body ii Bonnet iii Plug iv Valve Stem v seat ring vi cage	Surface flaws	MA	Visual & MT/PT	100% (on accessi ble surfaces)	10%	ASME B 16.34	ASME B 16.34	Inspection Report	√	P/ W	V		Butt weld ends shall be included.
		Dimensional checks	MA	Measurement	100%	10%	Appd Drg.	Appd Drg.	Inspection Report	√	P/ W	V		
		Hard Facing (wherever applicable)	MA	Hardness Measurement	One sample/ Lot	One sample /Lot	Appd Datasheet	Appd Datasheet	Inspection Report	√	P/ W	V		

BHEL						BIDDER/ SUPPLIER		FOR CUSTOMER REVIEW & APPROVAL			
ENGINEERING			QUALITY			Sign & Date		Doc No:			
	Name	Sign & Date		Name	Sign & Date	Seal			Name	Sign & Date	Seal
Prepared by:	CHETAN MALIK		Checked by:	SUMAN NAKWAL				Reviewed by:			
Reviewed by:	SURESH CHAND SHARMA		Reviewed by:	HARISH KUMAR				Approved by:			
Approved by:	GIRISH BHAGCHANDANI										

File No. PEM-PG0MM(24)/1/2025-PS-PEM-PGI-1 (Computer No. 134626)

Generated from eOffice by Manoj Bhardwaj, ENGINEER(MB)-PG I-1-PS-PEM, ENGINEER, BHARAT HEAVY ELECTRICAL LTD on 07/01/2025 03:44 pm

	MANUFACTURER/BIDDER/ SUPPLIER NAME & ADDRESS	STANDARD QUALITY PLAN	SPEC. NO : --	DATE: --
		CUSTOMER :--	QP NO.: PE-QP-999-145-H 006 REV 00	DATE: 04.01.2024
		PROJECT: --	PO NO.: --	DATE: --
		ITEM: CONTROL VALVE / SYSTEM: S&CE		SHEET 4 OF 8

SL NO.	COMPONENT & OPERATIONS	CHARACTERISTIC CHECKED	CATE GORY	TYPE OF CHECK	QUANTUM OF CHECK		REFERENCE DOCUMENT	ACCEPTANCE NORMS	FORMAT OF RECORD	AGENCY				REMARKS
	2	3	4	5	6		7	8	9	*	**			
					M	B/C				D	M	B	C	
FINAL TESTING/INSPECTION														
3.0	**TESTS ON COMPLETED VALVE**													
3.1	Actuator Chamber	Leakage	MA	Pneumatic Test	100%	10%	Mfr. standard	No Leakage	Test Certificate	√	P/W	W		
3.2	Body	Leakage (Body Mount Leakage)	MA	Hydro Test	100%	10%	ISA-S-75.19/	No Leakage	Test Certificate	√	P/W	W		
3.3	Seat Leakage	Seat Leakage	MA	Pneumatic / WaterTest	100%	10%	FCI-70.2	Approved Datasheet	Test Certificate	√	P/W	W		
4.0	**OPERATION TEST ON COMPLETED VALVE ASSEMBLY**	Valve Travel	MA	Measurement	100%	10%	Approved datasheet	Approved Datasheet	Inspection Report	√	P/W	W		
		Opening / Closing Time	MA	Measurement	100%	10%	Approved datasheet	Approved Datasheet	Inspection Report	√	P/W	W		
		Linearity / Cam characteristic	MA	Measurement	100%	10%	Approved datasheet	Approved Datasheet	Inspection Report	√	P/W	W		
		Repeatability	MA	Measurement	100%	10%	Approved datasheet	Approved Datasheet	Inspection Report	√	P/W	W		
		Hysterisis	MA	Measurement	100%	10%	Approved datasheet	Approved Datasheet	Inspection Report	√	P/W	W		
		Sensitivity	MA	Measurement	100%	10%	Approved datasheet	Approved Datasheet	Inspection Report	√	P/W	W		

BHEL						BIDDER/ SUPPLIER		FOR CUSTOMER REVIEW & APPROVAL			
ENGINEERING			QUALITY			Sign & Date		Doc No:			
	Name	Sign & Date		Name	Sign & Date	Seal			Name	Sign & Date	Seal
Prepared by:	CHETAN MALIK		Checked by:	SUMAN NAKWAL				Reviewed by:			
Reviewed by:	SURESH CHAND SHARMA		Reviewed by:	HARISH KUMAR				Approved by:			
Approved by:	GIRISH BHAGCHANDANI										

File No. PEM-PG0MM(24)/1/2025-PS-PEM-PGI-1 (Computer No. 134626)

Generated from eOffice by Manoj Bhardwaj, ENGINEER(MB)-PG I-1-PS-PEM, ENGINEER, BHARAT HEAVY ELECTRICAL LTD on 07/01/2025 03:44 pm

	MANUFACTURER/BIDDER/ SUPPLIER NAME & ADDRESS	STANDARD QUALITY PLAN		SPEC. NO : --	DATE: --
		CUSTOMER :--		QP NO.: PE-QP-999-145-H 006 REV 00	DATE: 04.01.2024
		PROJECT: --		PO NO.: --	DATE: --
		ITEM: CONTROL VALVE	SYSTEM: S&CE		SHEET 5 OF 8

SL NO.	COMPONENT & OPERATIONS	CHARACTERISTIC CHECKED	CATE GORY	TYPE OF CHECK	QUANTUM OF CHECK		REFERENCE DOCUMENT	ACCEPTANCE NORMS	FORMAT OF RECORD		AGENCY			REMARKS
	2	3	4	5	6		7	8	9	*	**			
					M	B/C				D	M	B	C	
		Accuracy(Overall)	MA	Measurement	100%	10%	Approved datasheet	Approved Datasheet	Inspection Report					
		Control Valve characteristics / CV Test	MA	Measurement (Press. vs. discharge and discharge vs opening 0-100% in steps of 10%)	One per type	One per type	Mfr. Procedure	Approved Datasheet	Test Certificate	√	P/W	V		
		Operation of limit switch & solenoids and other accessories	MA	Function	100%	10%	Mfr. Procedure	Approved Datasheet	Inspection Report	√	P/W	W		On assembled Valve.
		Overall dimensions	MI	Visual and dimensional	100%	10%	Approved drg	Approved drg	Inspection Report	√	P/W	W		
		Pre-defined valve position in case of air / signal failure	MI	Visual and dimensional	100%	10%	Approved data sheet	Approved data sheet	Inspection Report	√	P/W	W		
		Stamping (for direction of flow), Tag No.	MA	Visual	100%	10%	Approved drg /datasheet	Approved drg /datasheet	Test Certificate	√	P/W	W		

BHEL						BIDDER/ SUPPLIER		FOR CUSTOMER REVIEW & APPROVAL			
ENGINEERING			QUALITY			Sign & Date		Doc No:			
	Name	Sign & Date		Name	Sign & Date	Seal			Name	Sign & Date	Seal
Prepared by:	CHETAN MALIK		Checked by:	SUMAN NAKWAL				Reviewed by:			
Reviewed by:	SURESH CHAND SHARMA		Reviewed by:	HARISH KUMAR				Approved by:			
Approved by:	GIRISH BHAGCHANDANI										

File No. PEM-PG0MM(24)/1/2025-PS-PEM-PGI-1 (Computer No. 134626)

Generated from eOffice by Manoj Bhardwaj, ENGINEER(MB)-PG I-1-PS-PEM, ENGINEER, BHARAT HEAVY ELECTRICAL LTD on 07/01/2025 03:44 pm

	MANUFACTURER/BIDDER/ SUPPLIER NAME & ADDRESS	STANDARD QUALITY PLAN		SPEC. NO : --	DATE: --
		CUSTOMER :--		QP NO.: PE-QP-999-145-H 006 REV 00	DATE: 04.01.2024
		PROJECT: --		PO NO.: --	DATE: --
		ITEM: CONTROL VALVE	SYSTEM: S&CE		SHEET 6 OF 8

SL NO.	COMPONENT & OPERATIONS	CHARACTERISTIC CHECKED	CATE GORY	TYPE OF CHECK	QUANTUM OF CHECK		REFERENCE DOCUMENT	ACCEPTANCE NORMS	FORMAT OF RECORD	AGENCY				REMARKS
	2	3	4	5	6		7	8	9	*	**			
					M	B/C				D	M	B	C	
5.0	**AUXILIARY ITEMS(Performance test of auxiliary items shall be performed on the completely assembled valve)** – Refer NOTE-3													
5.1	Air Filter Regulator	Performance Test	MA	Measurement	Each type	Each type	Mfr. Standard	No leakage	--	√	P/V	V		
		Overall leakage	MA	Visual(soap solution)	100 %	10%	Mfr. Standard	No leakage	--	√	P/V	V		
5.2	Air lock relay	Performance Test	MA	Leakage test	100%	10%	Mfr. Standard	No leakage	--	√	P/V	V		
5.3	Smart Positioner	Physical Verification Make/Model	MA	Visual	100%	10%	Approved drg/ datasheet	Approved drg/ datasheet	--	√	P/V	V		
		Degree of Protection	MA	IP/NEMA test	Each type	Each type	Relevant Standard	Relevant Standard	--	√	P/V	V		
		Calibration	MA	Measurement	Each type	Each type	Mfr. Standard	Mfr. Standard	--	√	P/V	V		
5.7	**Electrical items** (i) Limit Switches	Routine Test	MA	HV, IR, Continuity function	100%	10%	Approved Data sheet	Approved Data sheet	--	√	P/V	V		
		Degree of protection	MA	IP/NEMA Tests	One sample/ type	One sample/ Lot	Approved Data sheet	Approved Data sheet	--	√	P/V	V		

BHEL						BIDDER/ SUPPLIER		FOR CUSTOMER REVIEW & APPROVAL			
ENGINEERING			QUALITY			Sign & Date		Doc No:			
	Name	Sign & Date		Name	Sign & Date	Seal			Name	Sign & Date	Seal
Prepared by:	CHETAN MALIK		Checked by:	SUMAN NAKWAL				Reviewed by:			
Reviewed by:	SURESH CHAND SHARMA		Reviewed by:	HARISH KUMAR				Approved by:			
Approved by:	GIRISH BHAGCHANDANI										

File No. PEM-PG0MM(24)/1/2025-PS-PEM-PGI-1 (Computer No. 134626)

Generated from eOffice by Manoj Bhardwaj, ENGINEER(MB)-PG I-1-PS-PEM, ENGINEER, BHARAT HEAVY ELECTRICAL LTD on 07/01/2025 03:44 pm

	MANUFACTURER/BIDDER/ SUPPLIER NAME & ADDRESS	STANDARD QUALITY PLAN		SPEC. NO : --	DATE: --
		CUSTOMER :--		QP NO.: PE-QP-999-145-H 006 REV 00	DATE: 04.01.2024
		PROJECT: --		PO NO.: --	DATE: --
		ITEM: CONTROL VALVE	SYSTEM: S&CE		SHEET 7 OF 8

SL NO.	COMPONENT & OPERATIONS	CHARACTERISTIC CHECKED	CATE GORY	TYPE OF CHECK	QUANTUM OF CHECK		REFERENCE DOCUMENT	ACCEPTANCE NORMS	FORMAT OF RECORD	*	**			REMARKS
										D	M	B	C	
	2	3	4	5	6		7	8	9					
					M	B/C								
	(ii) Solenoids	Routine Test	MA	HV, IR, Continuity function	100%	10%	Approved Data sheet	Approved Data sheet	--	√	P/V	V		
		Degree of protection	MA	IP/NEMA Tests	One sample/ type	One sample /Lot	Approved Data sheet	Approved Data sheet	--	√	P/V	V		
	(iii)Position Transmitter(if provided externally)	Routine Test	MA	HV, IR, Continuity function	100%	10%	Approved Data sheet	Approved Data sheet	--	√	P/V	V		
		Degree of protection	MA	IP/NEMA Tests	One sample/ type	One sample /Lot	Approved Data sheet	Approved Data sheet	--	√	P/V	V		
6.0	**PAINTING**	Paint Thickness	MA	Measurement DFT check	100%	10%	Approved drg/data sheet	Approved drg/data sheet	Inspection Report	√	P/W	V		
7.0	**PACKING**	Soundness of Packing against transit damage	MA	Visual	100%	100%	Approved drg/data sheet	Approved drg/data sheet	Inspection Report	√	P/W	V		

BHEL						BIDDER/ SUPPLIER		FOR CUSTOMER REVIEW & APPROVAL			
ENGINEERING			QUALITY			Sign & Date		Doc No:			
	Name	Sign & Date		Name	Sign & Date	Seal			Name	Sign & Date	Seal
Prepared by:	CHETAN MALIK		Checked by:	SUMAN NAKWAL				Reviewed by:			
Reviewed by:	SURESH CHAND SHARMA		Reviewed by:	HARISH KUMAR				Approved by:			
Approved by:	GIRISH BHAGCHANDANI										

File No. PEM-PG0MM(24)/1/2025-PS-PEM-PGI-1 (Computer No. 134626)

Generated from eOffice by Manoj Bhardwaj, ENGINEER(MB)-PG I-1-PS-PEM, ENGINEER, BHARAT HEAVY ELECTRICAL LTD on 07/01/2025 03:44 pm

	MANUFACTURER/BIDDER/ SUPPLIER NAME & ADDRESS	STANDARD QUALITY PLAN		SPEC. NO : --	DATE: --
		CUSTOMER :--		QP NO.: PE-QP-999-145-H 006 REV 00	DATE: 04.01.2024
		PROJECT: --		PO NO.: --	DATE: --
		ITEM: CONTROL VALVE	SYSTEM: S&CE		SHEET 8 OF 8

SL NO.	COMPONENT & OPERATIONS	CHARACTERISTIC CHECKED	CATE GORY	TYPE OF CHECK	QUANTUM OF CHECK		REFERENCE DOCUMENT	ACCEPTANCE NORMS	FORMAT OF RECORD		AGENCY			REMARKS
	2	3	4	5	6		7	8	9	*	**			
					M	B/C				D	M	B	C	

NOTES:

1. Cv test shall be conducted at FCRI/ laboratory approved by Govt. Of India/BHEL approved Laboratory. Alternatively, valid Cv test certificate for a similar control valve (same size, same Cv, same trim characteristics) can be accepted.
2. Copies of all TC's (Test Certificates) for materials duly correlated with Heat Nos., TC's for electrical items and mechanical tests(Leak/Operation), C.O.C's (Certificates of Conformance) shall be submitted to BHEL for verification and acceptance.
3. Valve manufacturer to arrange for COC (Certificates of Conformance) for the tests w.r.t. control valve accessories mentioned at Sl. No. 5 of the QAP.

LEGENDS:

*RECORDS, INDENTIFIED WITH "TICK"(√) SHALL BE ESSENTIALLY INCLUDED BY SUPPLIER IN QA DOCUMENTATION,

** **M**:SUPPLIER / MANUFACTURER/ SUB-SUPPLIER/SUB-CONTRACTOR, , **B**: BHEL/ BHEL NOMINATED THIRD PARTY INSPECTION AGENCY, **C**: CUSTOMER, **P**:PERFORM,**W**:WITNESS, **V:**VERIFICATION,AS APPROPRIATE **MA**:MAJOR,**MI**:MINOR,**CR:**CRITICAL,**RT-**RADIOGRAPHIC TEST,**UT-**ULTRASONIC TEST,**PT-**DYE PENETRANT TEST,**MT-**MAGNETIC PARTICLE TEST

BHEL						BIDDER/ SUPPLIER		FOR CUSTOMER REVIEW & APPROVAL			
ENGINEERING			QUALITY			Sign & Date		Doc No:			
	Name	Sign & Date		Name	Sign & Date	Seal			Name	Sign & Date	Seal
Prepared by:	CHETAN MALIK		Checked by:	SUMAN NAKWAL				Reviewed by:			
Reviewed by:	SURESH CHAND SHARMA		Reviewed by:	HARISH KUMAR				Approved by:			
Approved by:	GIRISH BHAGCHANDANI										

File No. PEM-PG0MM(24)/1/2025-PS-PEM-PGI-1 (Computer No. 134626)

Generated from eOffice by Manoj Bhardwaj, ENGINEER(MB)-PG I-1-PS-PEM, ENGINEER, BHARAT HEAVY ELECTRICAL LTD on 07/01/2025 03:44 pm

STANDARD CONTROL VALVE HOOK-UP DIAGRAM (WITH SMART POSITIONER)

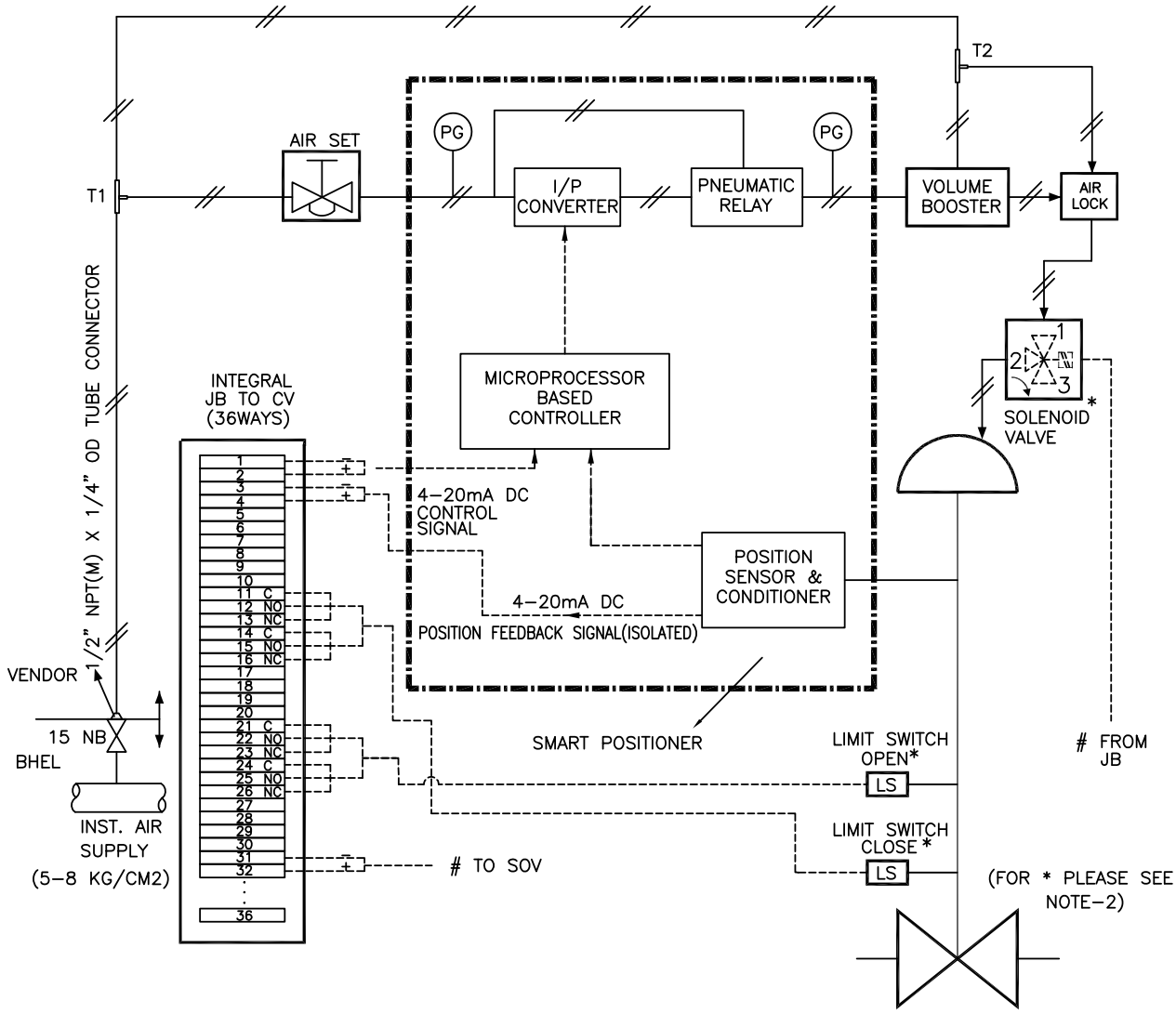

NOTES :-

1. POSITION OF EACH VALVE ON SUPPLY AIR FAILURE / ELECTRICAL SIGNAL FAILURE SHALL BE AS PER SPECIFICATION / DATA SHEET.
2. SOLENOID VALVE & LIMIT SWITCHES WILL BE PROVIDED ONLY FOR CONTROL VALVES IF INDICATED IN RESPECTIVE DATA SHEETS.
3. SOLENOID VALVES PORTS CONDITION:
   PORT 1 AND 2 SHALL BE CONNECTED UNDER DE-ENERGISED CONDITION.
   PORT 2 AND 3 SHALL BE CONNECTED UNDER ENERGISED CONDITION.
4. PRESSURE GAUGES REQUIRED FOR AIR SUPPLY & OUTPUT(S).
5. MOUNTING ACCESSORIES AS REQUIRED.
6. POSITION FEEDBACK SIGNAL SHALL BE 2 WIRE 4-20mA ISOLATED SIGNAL.
7. JB TERMINALS SHALL BE CAGE CLAMP TYPE SUITABLE FOR 2.5 SQ. MM COPPER WIRE. EXTERNAL CONNECTION, OF PLUG IN TYPE OR THROUGH CABLE GLAND, SHALL BE AS PER DATA SHEET
8. ALL APPLICABLE ACCESSORIES SHALL BE PROVIDED AS INDICATED IN THE INDIVIDUAL CONTROL VALVE DATA SHEET / ACCESSORIES DATA SHEET.
9. 12 METERS 1/4" SS TUBING (AS PER ACCESSORIES DATA SHEET) & 1 SET OF FITTINGS TO BE SUPPLIED FOR EACH CONTROL VALVE FOR CONNECTION TO ISO VLV AT INST AIR HEADER ON ONE END AND TO AIR LOCK RELAY/AIR FILTER REGULATOR ON THE OTHER END. ALL THE BRASS / SS FITTINGS SHALL BE DOUBLE COMPRESSION TYPE.
10. VOLUME BOOSTER (ALONG WITH TEE-T2 AND RELATED TUBING & CONNECTORS) SHALL BE PROVIDED IF REQUIRED. AIR CONNECTION TO VOLUME BOOSTER FROM TEE-T2 SHALL BE PROVIDED.

STANDARD CONTROL VALVE HOOK-UP DIAGRAM
(FOR ON / OFF TYPE)

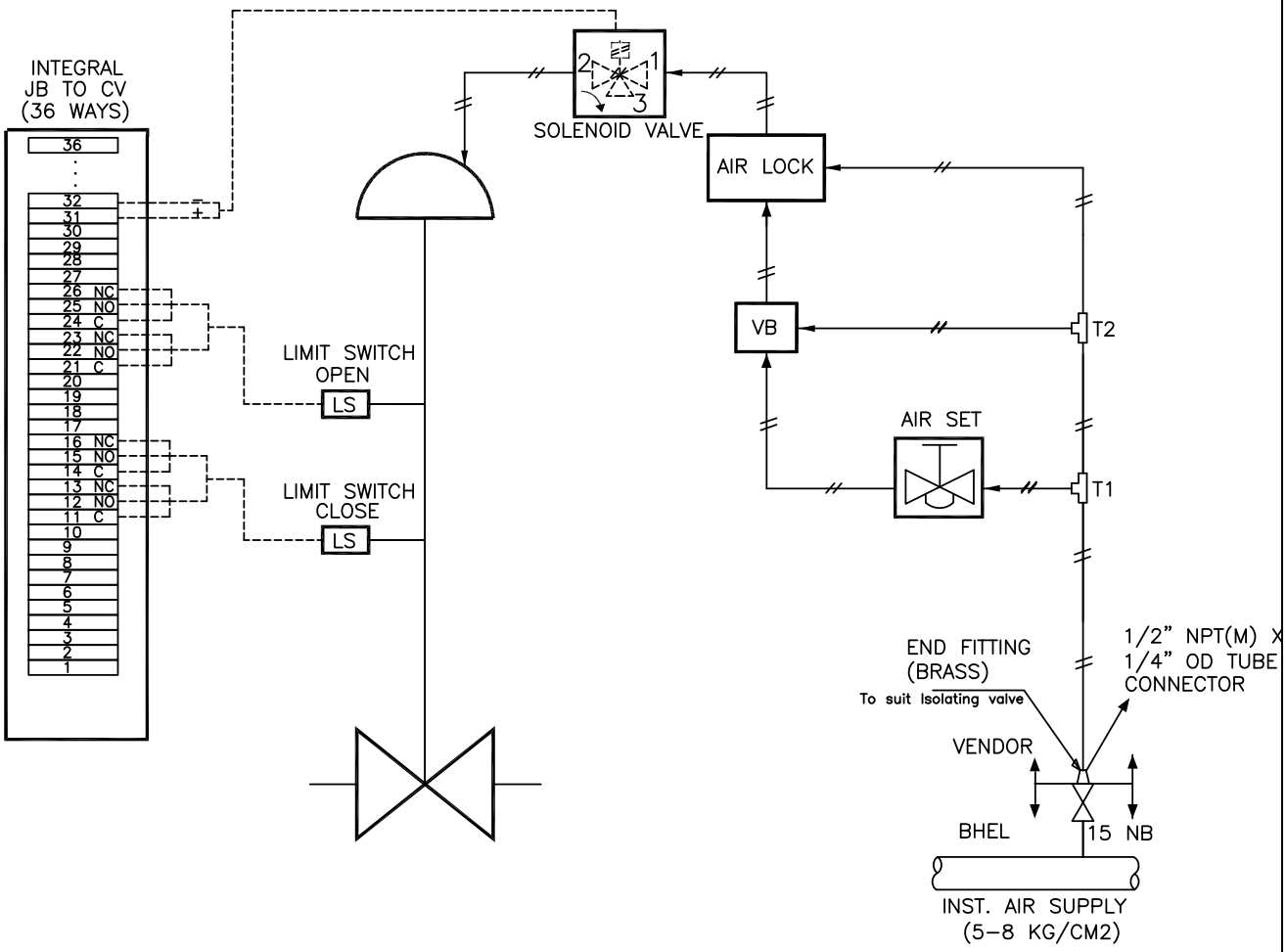

NOTES :–

1. POSITION OF EACH VALVE ON SUPPLY AIR FAILURE / ELECTRIC SIGNAL FAILURE SHALL BE AS PER SPECIFICATION / DATA SHEET.
2. SOLENOID VALVES PORTS CONDITION:
   PORT 1 AND 2 SHALL BE CONNECTED UNDER DE–ENERGISED CONDITION.
   PORT 2 AND 3 SHALL BE CONNECTED UNDER ENERGISED CONDITION.
3. MOUNTING ACCESSORIES AS REQUIRED.
4. JB TERMINALS SHALL BE CAGE CLAMP TYPE SUITABLE FOR 2.5 SQ. MM COPPER WIRE. EXTERNAL CONNECTION, OF PLUG IN TYPE OR THROUGH CABLE GLAND, SHALL BE AS PER DATA SHEET.
5. ALL APPLICABLE ACCESSORIES SHALL BE PROVIDED AS INDICATED IN THE INDIVIDUAL CONTROL VALVE DATA SHEET / ACCESSORIES DATA SHEET.
6. 12 METERS 1/4" SS TUBING (AS PER ACCESSORIES DATA SHEET) & 1 SET OF FITTINGS TO BE SUPPLIED FOR EACH CONTROL VALVE FOR CONNECTION TO ISO VLV AT INST AIR HEADER ON ONE END AND TO AIR LOCK RELAY/AIR FILTER REGULATOR ON THE OTHER END. ALL THE BRASS / SS FITTINGS SHALL BE DOUBLE COMPRESSION TYPE.

STANDARD CONTROL VALVE HOOK-UP DIAGRAM
(DOUBLE ACTING PISTON ACTUATOR WITH SMART POSITIONER)

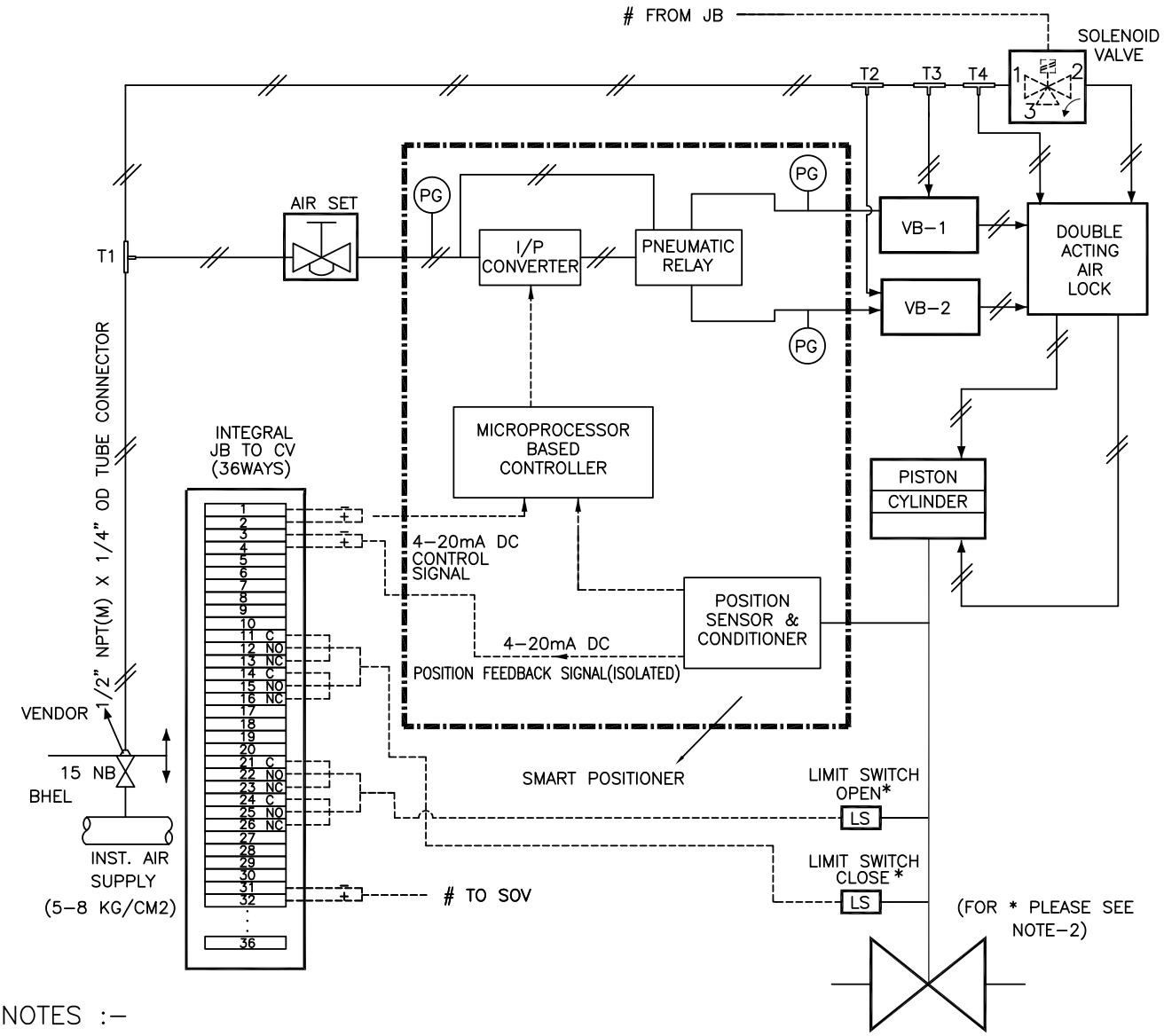

NOTES :–

1. POSITION OF EACH VALVE ON SUPPLY AIR FAILURE / ELECTRICAL SIGNAL FAILURE SHALL BE AS PER SPECIFICATION / DATA SHEET. AIR LOCK SHALL BE PROVIDED ACCORDINGLY.
2. SOLENOID VALVE & LIMIT SWITCHES WILL BE PROVIDED ONLY FOR CONTROL VALVES IF INDICATED IN RESPECTIVE DATA SHEETS.
3. SOLENOID VALVES PORTS CONDITION:
   PORT 1 AND 2 SHALL BE CONNECTED UNDER DE–ENERGISED CONDITION.
   PORT 2 AND 3 SHALL BE CONNECTED UNDER ENERGISED CONDITION.
4. PRESSURE GAUGES REQUIRED FOR AIR SUPPLY & OUTPUT(S).
5. MOUNTING ACCESSORIES AS REQUIRED.
6. POSITION FEEDBACK SIGNAL SHALL BE 2 WIRE 4–20mA ISOLATED SIGNAL.
7. JB TERMINALS SHALL BE CAGE CLAMP TYPE SUITABLE FOR 2.5 SQ. MM COPPER WIRE. EXTERNAL CONNECTION, OF PLUG IN TYPE OR THROUGH CABLE GLAND, SHALL BE AS PER DATA SHEET
8. ALL APPLICABLE ACCESSORIES SHALL BE PROVIDED AS INDICATED IN THE INDIVIDUAL CONTROL VALVE DATA SHEET / ACCESSORIES DATA SHEET.
9. 12 METERS 1/4" SS TUBING (AS PER ACCESSORIES DATA SHEET) & 1 SET OF FITTINGS TO BE SUPPLIED FOR EACH CONTROL VALVE FOR CONNECTION TO ISO VLV AT INST AIR HEADER ON ONE END AND TO AIR LOCK RELAY/AIR FILTER REGULATOR ON THE OTHER END. ALL THE BRASS / SS FITTINGS SHALL BE DOUBLE COMPRESSION TYPE.
10. VOLUME BOOSTER (ALONG WITH TEE–T2 AND RELATED TUBING & CONNECTORS) SHALL BE PROVIDED IF REQUIRED. AIR CONNECTION TO VOLUME BOOSTER FROM TEE–T2 & TEE–T3 SHALL BE PROVIDED.

File No. PEM-PG0MM(24)/1/2025-PS-PEM-PGI-1 (Computer No. 134626)
Generated from eOffice by Manoj Bhardwaj, ENGINEER(MB)-PG I-I-PS-PEM, ENGINEER, BHARAT HEAVY ELECTRICAL LTD on 07/01/2025 03:44 pm

CONTROL VALVE HOOK-UP DIAGRAM
(WITH SMART POSITIONER-PROFIBUS BASED)

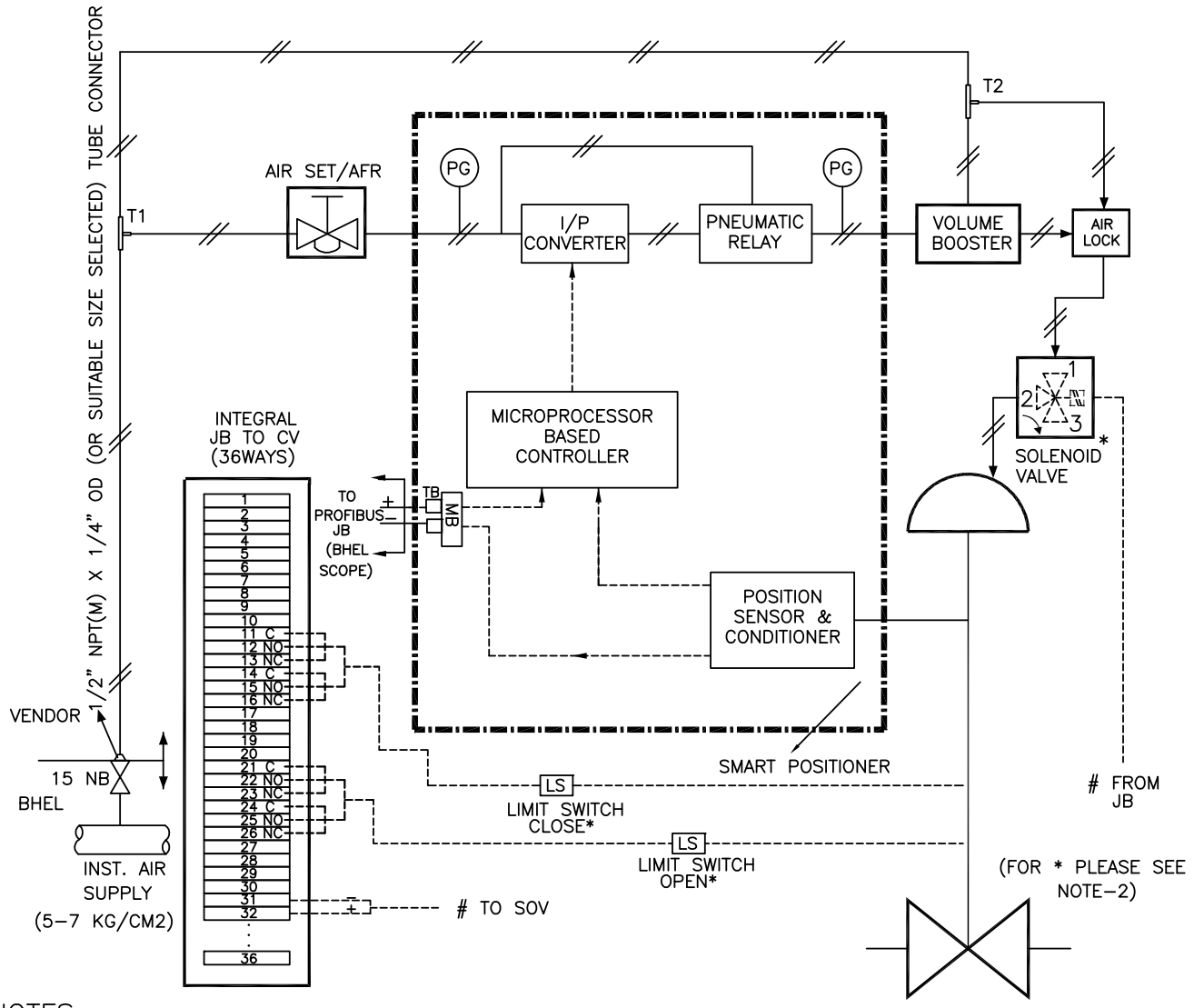

NOTES :–

1. POSITION OF EACH VALVE ON SUPPLY AIR FAILURE / ELECTRICAL SIGNAL FAILURE SHALL BE AS PER SPECIFICATION / DATA SHEET.
2. SOLENOID VALVE & LIMIT SWITCHES WILL BE PROVIDED ONLY FOR CONTROL VALVES IF INDICATED IN RESPECTIVE DATA SHEETS.
3. SOLENOID VALVES PORTS CONDITION:
   PORT 1 AND 2 SHALL BE CONNECTED UNDER DE–ENERGISED CONDITION.
   PORT 2 AND 3 SHALL BE CONNECTED UNDER ENERGISED CONDITION.
4. PRESSURE GAUGES REQUIRED FOR AIR SUPPLY AT INLET AND OUTLET OF SMART POSITIONERS.
5. MOUNTING ACCESSORIES AS REQUIRED.
6. PROFIBUS BASED SMART POSITIONER SHALL BE PROVIDED.
7. JB TERMINALS SHALL BE CAGE CLAMP TYPE SUITABLE FOR 2.5 SQ. MM COPPER WIRE. EXTERNAL CONNECTION, OF PLUG IN TYPE OR THROUGH CABLE GLAND, SHALL BE AS PER DATA SHEET.
8. ALL APPLICABLE ACCESSORIES SHALL BE PROVIDED AS INDICATED IN THE INDIVIDUAL CONTROL VALVE DATA SHEET / ACCESSORIES DATA SHEET.
9. TUBING AND FITTINGS TO BE PROVIDED AS FOLLOWS:–
   (a) TUBING: MATERIAL– SS316; SIZE– 1/4" OR SUITABLE SIZE SELECTED FOR EACH CONTROL VALVE ASSEMBLY; LENGTH– 12 METER PER CV.
   (b) FITTINGS: MATERIAL– SS,DOUBLE COMPRESSION TYPE; TUBE CONNECTOR– 1/2" NPT(M) X 1/4" OR SUITABLE SIZE SELECTED FOR EACH CONTROL VALVE ASSEMBLY; FITTINGS FOR CONNECTION TO AIR FILTER REGULATOR,AIR LOCK RELAY,IA HEADER ISOLATION VALVE AND EQUAL TEES.
10. VOLUME BOOSTER/DUMP VALVE AND ITS RELATED TUBING & CONNECTORS SHALL BE PROVIDED, IF REQUIRED TO ACHIEVE THE DESIRED TRAVEL TIME (<10Sec). AIR CONNECTION TO VOLUME BOOSTER/DUMP VALVE SHALL ALSO BE PROVIDED.
11. EXPANDER/REDUCER BETWEEN VALVE BODY AND PIPE SHALL BE SUPPLIED BY BHEL.
12. EXPANDER/REDUCER BETWEEN VALVE BODY AND DIFFUSER/CARTRIDGE/SILENCER(IF APPLICABLE) SHALL BE SUPPLIED BY BIDDER.

STANDARD CONTROL VALVE HOOK-UP DIAGRAM (DOUBLE ACTING PISTON ACTUATOR WITH SMART POSITIONER-PROFIBUS BASED)

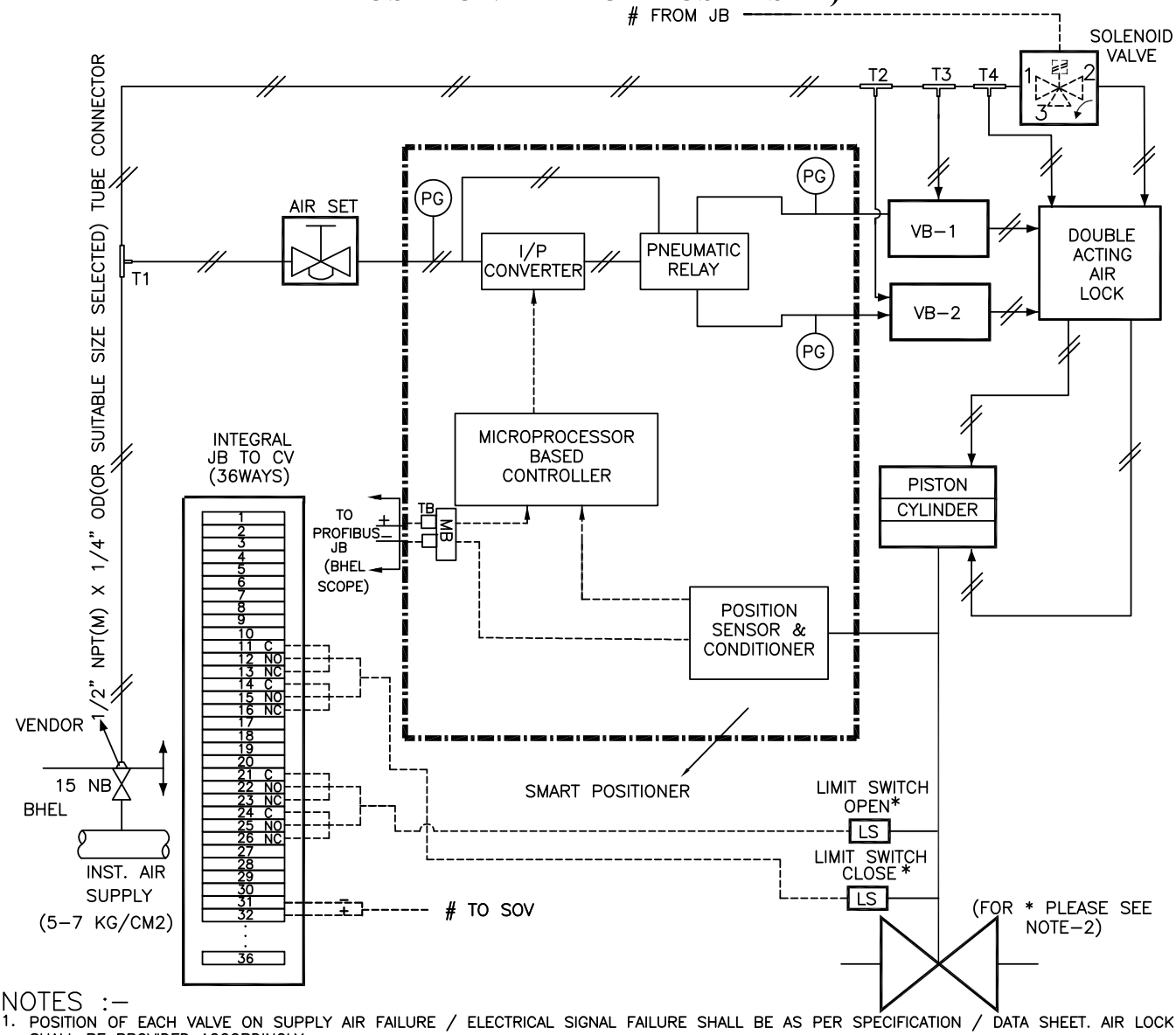

NOTES :-

1. POSITION OF EACH VALVE ON SUPPLY AIR FAILURE / ELECTRICAL SIGNAL FAILURE SHALL BE AS PER SPECIFICATION / DATA SHEET. AIR LOCK SHALL BE PROVIDED ACCORDINGLY.
2. SOLENOID VALVE & LIMIT SWITCHES WILL BE PROVIDED ONLY FOR CONTROL VALVES IF INDICATED IN RESPECTIVE DATA SHEETS.
3. SOLENOID VALVES PORTS CONDITION:
   PORT 1 AND 2 SHALL BE CONNECTED UNDER DE-ENERGISED CONDITION.
   PORT 2 AND 3 SHALL BE CONNECTED UNDER ENERGISED CONDITION.
4. PRESSURE GAUGES REQUIRED FOR AIR SUPPLY AT INLET & OUTLET OF SMART POSITIONER.
5. MOUNTING ACCESSORIES AS REQUIRED.
6. PROFIBUS BASED SMART POSITIONER SHALL BE PROVIDED.
7. JB TERMINALS SHALL BE CAGE CLAMP TYPE SUITABLE FOR 2.5 SQ. MM COPPER WIRE. EXTERNAL CONNECTION, OF PLUG IN TYPE OR THROUGH CABLE GLAND, SHALL BE AS PER DATA SHEET
8. ALL APPLICABLE ACCESSORIES SHALL BE PROVIDED AS INDICATED IN THE INDIVIDUAL CONTROL VALVE DATA SHEET / ACCESSORIES DATA SHEET.
9. TUBING AND FITTINGS TO BE PROVIDED AS FOLLOWS:-
   (a) TUBING: MATERIAL- SS316; SIZE- 1/4" OR SUITABLE SIZE SELECTED FOR EACH CONTROL VALVE ASSEMBLY; LENGTH- 12 METER PER CV.
   (b) FITTINGS: MATERIAL- SS,DOUBLE COMPRESSION TYPE; TUBE CONNECTOR- 1/2" NPT(M) X 1/4" OR SUITABLE SIZE SELECTED FOR EACH CONTROL VALVE ASSEMBLY; FITTINGS FOR CONNECTION TO AIR FILTER REGULATOR,AIR LOCK RELAY,IA HEADER ISOLATION VALVE AND EQUAL TEES.
10. VOLUME BOOSTER/DUMP VALVE AND ITS RELATED TUBING & CONNECTORS SHALL BE PROVIDED, IF REQUIRED TO ACHIEVE THE DESIRED TRAVEL TIME (<10Sec). AIR CONNECTION TO VOLUME BOOSTER/DUMP VALVE SHALL ALSO BE PROVIDED.
11. EXPANDER/REDUCER BETWEEN VALVE BODY AND PIPE SHALL BE SUPPLIED BY BHEL.
12. EXPANDER/REDUCER BETWEEN VALVE BODY AND DIFFUSER/CARTRIDGE/SILENCER(IF APPLICABLE) SHALL BE SUPPLIED BY BIDDER.

बी एच ई एल BHEL	TECHNICAL SPECIFICATION & DATA SHEET FOR CONTROL VALVE WITH ACCESSORIES (PNEUMATICALLY OPERATED)	Specification No.: PE-TS-497-145-H104 Rev. No. 00 Date : 30.12.2024

SPECIFICATIONS FOR MICROPROCESSOR BASED SMART POSITIONER

1	Electrical	a) Input Demand Signal	4-20 mA **for HART compatible; Soft Signal for Profibus**
		b) Power Supply	Loop Powered from the output card of Control System.
		c) HART / Profibus Protocol	Compatibility for Remote Calibration & Diagnostics (Super-imposed HART signal on input Signal 4-20 mA and Profibus
		d. Valve position sensing	Position sensing: 4-20 mA output signal for HART and soft signal for Profibus compatible
2	Environment	a) Operating temp.	(-)30 To 80 Deg. C
		b) Humidity	0-95 %
		c) Protection class	IP-65 Minimum
3	Software for Configuration and Diagnostics	Software	Software shall meet the requirements for Configuration, Diagnostics, Calibration and Testing of the actuator.
		Diagnostic/Test features	Advanced diagnostic features like Stroke counter or Travel counter, Leakage in actuators, Valve Signature analysis, Step Response test, Valve friction /Jamming detection etc to be provided.
4	Test reports/ Certificates	Factory Valve Signature Tests Reports (Pr Vs Valve travel and Travel Vs I/P signal) are to be provided.	
		Test certificates as per Manufacture Standard/Relevant Standard are to be submitted.	
5	Configuration/ Calibration.	Remote & Local Calibration, Auto & Manual Calibration shall be possible.	
6	Operating Range	Full range/ Split range.	
7	Modes	Valve Action	Direct / Reverse Valve Action
		Flow Characterization	Possible to fit Valve Characteristic Curves- Linear , Equal percentage etc.
8	Fail Safe/Fail Freeze	Fail Safe/Fail Freeze feature is to be provided. (In case the fail freeze feature is not intrinsic to the positioner, Bidder shall achieve the same externally through solenoid valve connected in the pneumatic circuit).	
9	Pneumatic	Air capacity	Sufficient to handle the valves & actuators selected/ Boosters to be supplied, if required.
		Air pressure	To suit the air supply pressure/quality available.
		Process connection	¼" NPT
10	Performance	Characteristic deviation	<=0.5 % of span.
		Ambient temp effect	<=0.01 %/ deg C or better.
11	EMC & CE Compliance	Required to International Standard like EN/IEC.	EN50081-2 & EN50082 or equivalent.
12	Accessories	In-built Operator Panel	Display with push buttons for configuration and display on the positioner itself (Password protected/Hardware lock).
		Press Gauge Block	For supply & output pressures, Air Filter Regulator and other accessories shall be provided on as required basis for making system complete.
		Electrical Cable Entry	1/2'"NPT, side or bottom entry to avoid water **ingress**
		Valves Mounting Assembly	**For-Single acting/Double acting actuators on as required basis**

बी एच ई एल BHEL	TECHNICAL SPECIFICATION & DATA SHEET FOR CONTROL VALVE WITH ACCESSORIES (PNEUMATICALLY OPERATED)	Specification No.: PE-TS-497-145-H104 Rev. No. 00 Date :30.12.24

CONTROL VALVES COMPLETE WITH POSITIONER AND ALL ACCESSORIES MOUNTED, TUBED AND TERMINATED ON JB

[A]	**MAIN SUPPLY**			
SR. NO.	TAG NO	DESCRIPTION	QTY/UNIT	TOTAL QTY FOR 2 UNITS
1	ASV-8	D/A PEGGING FROM AUX. STEAM HEADER	1	2
2	CRHV-6	D/A PEGGING FROM CRH LINE	1	2
3	CDV-25	LOW LOAD CONDENSATE CONTROL	1	2
4	CDV-39	GSC/CEP MIN. FLOW RECIRCULATION	1	2
5	CDV-65	CEP-A MIN. FLOW RECIRCULATION	1	2
6	CDV-67	CEP-B MIN. FLOW RECIRCULATION	1	2
7	CDV-69	CEP-C MIN. FLOW RECIRCULATION	1	2
8	CDV-43	EXCESS DUMP CONTROL	1	2
9	CDV-72	CONDENSATE FOR VALVE GLAND SEALING & F/T	1	2
10	CDV-84	CONDENSATE SPRAY FOR F/T	1	2
11	CDV-94	CONDENSATE SPRAY FOR UNIT F/T	1	2
12	DRV-53	HPH-9A NORMAL DRAIN TO HPH-8A	1	2
13	DRV-59	HPH-9B NORMAL DRAIN TO HPH-8B	1	2
14	DRV-56	HPH-9A ALT DRAIN TO F/T	1	2
15	DRV-62	HPH-9B ALT DRAIN TO F/T	1	2
16	DRV-2	HPH-8A NORMAL DRAIN TO HPH-7A	1	2
17	DRV-8	HPH-8B NORMAL DRAIN TO HPH-7B	1	2
18	DRV-5	HPH-8A ALT DRAIN TO F/T	1	2
19	DRV-11	HPH-8B ALT DRAIN TO F/T	1	2
20	DRV-15	HPH-7A NORMAL DRAIN TO DEAERATOR	1	2
21	DRV-22	HPH-7B NORMAL DRAIN TO DEAERATOR	1	2
22	DRV-18	HPH-7A ALT DRAIN TO F/T	1	2
23	DRV-25	HPH-7B ALT DRAIN TO F/T	1	2
24	DRV-82	LPH-5 NORMAL DRAIN TO LPH-4	1	2
25	DRV-85	LPH-5 ALT. DRAIN TO F/T	1	2
26	DRV-65	LPH-4 NORMAL DRAIN TO LPH-3	1	2
27	DRV-68	LPH-4 ALT. DRAIN TO F/T	1	2
28	DRV-77	DRIP PUMP DISCHARGE CONTROL	1	2
29	DRV-31	LPH-3 ALT. DRAIN TO F/T	1	2
30	DRV-48	DEAERATOR OVERFLOW TO F/T	1	2
31	DMV-43	NORMAL DM MU TO HOTWELL	1	2
32	DMV-78	EMERGENCY DM MU TO HOTWELL	1	2
33	DMCWSG8	DMCW SYSTEM FOR SG AUX'S	1	2
34	DMCW18	DMCW SYSTEM FOR TG AUX'S	1	2
[B]	**1/4 " SS TUBING (12 METER FOR EACH TAG)**			816 MTR
[C]	**SS FITTINGS- FOR EACH TAG**		1 LOT	2 LOT
1	SS FITTINGS for connection to Air Filter Regulator- FOR EACH TAG		1 LOT	2 LOT
2	SS FITTINGS for connection to Air Lock Relay- FOR EACH TAG		1 LOT	2 LOT
3	SS FITTINGS for connection to IA Header Isolation Valve - FOR EACH TAG		1 LOT	2 LOT
4	SS EQUAL TEE - FOR EACH TAG		1 LOT	2 LOT
5	SS 1/2 " NPT(M) X 1/4 " OD TUBE CONNECTOR- FOR EACH TAG		1 LOT	2 LOT
[D]	**CV TEST CHARGES FOR EACH CONTROL VALVE**		1 LOT	1 LOT
[E]	**VALVE DIAGNOSTIC AND CONFIGURATION SOFTWARE (FOR ALL TAGS)**		1 LOT	2 LOTs

File No. PEM-PG0MM(24)/1/2025-PS-PEM-PGI-1 (Computer No. 134626)
Generated from eOffice by Manoj Bhardwaj, ENGINEER(MB)-PG I-1-PS-PEM, ENGINEER, BHARAT HEAVY ELECTRICAL LTD on 07/01/2025 03:44 pm

	TECHNICAL SPECIFICATION & DATA SHEET FOR CONTROL VALVE WITH ACCESSORIES (PNEUMATICALLY OPERATED)	Specification No.: PE-TS-497-145-H104
		Rev. No. 00
		Date :30.12.24

LIST OF COMMISSIONING SPARES		
S NO	**ITEM DESCRIPTION**	**QUANTITY FOR STATION**
1	Gaskets	One (1) set with each control valve tag
2	Gland Packing	One (1) set with each control valve tag

LIST OF MANDATORY SPARES		
Sr. No.	**Description**	**Qty FOR STATION**
[A]	**Mandatory Spares for SG DMCW valve**	
1	Pneumatic and electro-hydraulic actuator assembly	1 No. of each type, model and rating
2	Diaphragms, O' rings, seals etc.	5 Nos. of all types make etc.
3	Solenoid valves (if applicable)	1 No. of each type
4	Smart positioners (complete unit) & accessories (link assembly)	2 Nos. of each type, model and rating
5	Pneumatic air-filter/Regulator	2 Nos. of each type, make rating etc.
6	Air lock relays	1 No. of each type, model and rating
7	Valve trim (including cage, plug, stem, seat rings, guide bushings etc.)	1 set for each type,class,size of control valve
8	Gland Packing	5 sets
9	Gaskets	5 sets
[B]	**Mandatory Spares for CEP min recirculation valve**	
1	CEP recirculation valve trim which includes spindle with cone, seat ring, guide bush, cage	1 Set
2	CEP recirculation valve soft parts i.e. gland packing, seals, O-rings, gaskets etc.	3 Set
[C]	**Mandatory Spares for Process Connection Piping**	
1	Fittings	
(a)	SS FITTINGS for connection to Air Filter Regulator- FOR EACH TAG	100 nos. of each type
(b)	SS FITTINGS for connection to Air Lock Relay- FOR EACH TAG	100 nos. of each type
(c)	SS FITTINGS for connection to IA Header Isolation Valve - FOR EACH TAG	100 nos. of each type
(d)	SS EQUAL TEE - FOR EACH TAG	100 nos. of each type
2	Pneumatic air-filter/Regulator	20 Nos. of each type and model
3	Valves of all types(like Equalising Valves, Exhaust Valves, etc.)	20 Nos. of each type and model

NOTES

1. Wherever the quantities have been indicated for each type, size, thickness, material, radius, range etc., these shall cover all the items supplied and installed and the breakup for these shall be furnished in the bid. In case spares indicated in the list are not applicable to the particular design offered by the bidder, the bidder should offer spares applicable to offered design with quantities generally in line with the approach followed in the above list.

File No. PEM-PG0MM(24)/1/2025-PS-PEM-PGI-1 (Computer No. 134626)
Generated from eOffice by Manoj Bhardwaj, ENGINEER(MB)-PG I-1-PS-PEM, ENGINEER, BHARAT HEAVY ELECTRICAL LTD on 07/01/2025 03:44 pm

	TECHNICAL SPECIFICATION & DATA SHEET FOR CONTROL VALVE WITH ACCESSORIES (PNEUMATICALLY OPERATED)	**Specification No.: PE-TS-497-145-H104**
		Rev. No. 00
		Date : 30.12.2024

PAINTING SPECIFICATION

Package	Condition	Surface Preparation	Primer Coat	No. of Coats	DFT (in Microns)	Intermediate Coat (in Microns)	No. of Coats	DFT (in Microns)	Final Coat	No. of Coats	DFT (in Microns)	Total DFT (Min)
Control Valve	F91,WC9,WCB valves (above 60 deg C)	Sa 2.5	Heat Resistant Aluminium Paint IS 13183, Grade I/II	1	20	NA	NA	NA	Heat Resistant Aluminium Paint IS 13183, Grade I/II	1	20	40
	Carbon Steel Actuators and F91,WC9,WCB valves (upto 60 deg C #)	Sa 2.5	Epoxy Based Zinc Primer (92% Zinc in dry film (min), % VS = 35 (min))	1	30	Epoxy based MIO pigmented intermediate coat	1	75	Epoxy based Finish paint to IS14209 / Aliphatic acrylic Polyurethane paint to IS :13213	2	30	165

NOTES:

Stainless Steel, Non- Ferrous and Galvanised item/portion will not be painted

- For Cast/forged valves upto & including design temperature 60Deg.C, Aluminium painting as per IS-13183 Gr-3 or better with total DFT 40Micron is also acceptable

DFT shown is minimum. Bidder may offer higher paint thickness

बीएचईएल BHEL	TECHNICAL SPECIFICATION & DATA SHEET FOR CONTROL VALVE WITH ACCESSORIES (PNEUMATICALLY OPERATED)	Specification No.: PE-TS-497-145-H104
		Rev. No. 00
		Date : 30.12.2024

PACKING SPECIFICATION

The item with all accessories needs to be suitably packed to avoid physical damage and corrosion during transit and storage. The packing shall be suitable for different handing operation and for the adverse condition during transportation and during indoor/outdoor storage of material. The following are the minimum requirements to be complied with for packing.

Type of Packing: Item shall be fully covered with multi layered cross laminated colourless polyethylene sheet of at least 100 GSM and shall be packed inside wooden box. Sufficient amount of silica gel also to be placed inside polyethylene sheet. Item shall be firmly fixed to the bottom of the packing box to restrict movement. The electronic items like positioner and other delicate items like pressure gauges etc. shall be individually wrapped in polyethylene air bubble film or black foam. End openings are to be protected with plastic caps. Corrosion inhibitors are to be applied on all unpainted carbon steel surfaces.

Quality of wood: Wood used for packing box shall be Pinewood, Rubber wood, Mango wood, Fir wood, Silver Oak wood or other as per availability with moisture content not exceeding 30%.

Cushioning material and moisture absorber: Suitable cushioning shall be provided by rubberized coir/ thermocol / expanded soft polyethylene foam. Adequate quantity of silica gel packed in thin muslin cloth cotton bags should be suitably placed inside the packing box.

Packing slip & holder: Packing slip kept in polyethylene bag shall be placed inside the wooden box at appropriate place. One copy of packing slip wrapped in polyethylene bag covered in galvanized iron tin sheet/ aluminium packing slip holder shall be fixed on the external surface the packing box.

बी एच ई एल BHEL	TECHNICAL SPECIFICATION & DATA SHEET FOR CONTROL VALVE WITH ACCESSORIES (PNEUMATICALLY OPERATED)	Specification No.: PE-TS-497-145-H104 Rev. No. 00 Date : 30.12.2024

DOCUMENTATION REQUIREMENT

DRAWINGS & DOCUMENTS TO BE SUBMITTED ALONG WITH THE BID

1	BIDDER TO SUBMIT THE DOCUMENTS AS PER CLAUSE MENTIONED IN NIT.

DRAWINGS & DOCUMENTS TO BE SUBMITTED AFTER AWARD OF CONTRACT

Sl. No.	DOCUMENT TITLE
1	DATA SHEET, CALCULATION, BOQ/BOM, GA DRAWING, EDGE Preparation details & HOOK UP /INSTALLATION DRAWING for Control Valves
2	QAP for Control Valves
3	CALIBRATION REPORTS

DRAWINGS & DOCUMENTS TO BE SUBMITTED AS FINAL/AS-BUILT DOCUMENT

Sl. No.	DOCUMENT TITLE
1	DATA SHEET, CALCULATION, BOQ/BOM, GA DRAWING, EDGE Preparation details & HOOK UP /INSTALLATION DRAWING for Control Valves
2	APPROVED QUALITY PLAN
3	CALIBRATION REPORTS
4	CATALOGUE/TECHNICAL LITERATURE/O&M MANUAL
5	ALL TEST CERTIFICATES

	TECHNICAL SPECIFICATION & DATA SHEET FOR CONTROL VALVE WITH ACCESSORIES (PNEUMATICALLY OPERATED)	Specification No.: PE-TS-497-145-H104						
		Rev. No. 00						
		Date : 30.12.2024						
DATA SHEET FOR CONTROL VALVE TO BE FILLED BY BIDDER FOR EACH TAG AT TENDER STAGE								
A. GENERAL INFORMATION								
1	TAG NUMBER / SERVICE							
2	LOCATION / DUTY							
B. DESIGN CODES & STANDARDS								
3	CODE / STANDARD	REFER GENERAL NOTES						
C. TECHNICAL PARAMETERS / DESIGN FEATURES								
4	PIPE SIZE (OD X THK) mm INLET / OUTLET							
5	PIPE MATERIAL INLET / OUTLET							
6	VALVE BODY TYPE / MATERIAL / SIZE CRITERIA							
7	GUIDING / NO. OF PORTS / TRIM FORM							
8	CAGE TYPE / CAGE MATERIAL / GUIDE BUSH							
9	PLUG TYPE / PLUG MATERIAL / STEM MATERIAL							
10	YOKE MATERIAL / SEAT MATERIAL & TYPE							
11	PACKING MATERIAL / NOS / TYPE							
12	END CONNECTION / ANSI RATING / BONNET TYPE							
13	FLOW ACTION / VALVE OUTLET VELOCITY							
14	LEAKAGE CLASS / NOISE LEVEL (dBA)							
15	VACUUM SERVICE / ANTI CAVITATION TRIM							
16	ACTUATOR TYPE / TYPE OF PNEUMATIC ACT / SIZING CRITERIA							
17	TRAVEL TIME FOR OPEN TO CLOSE, CLOSE TO OPEN							
18	VALVE POSN. ON: SIGNAL AIR FAILURE / SUPPLY AIR FAILURE							
19	EXPANDER / REDUCER BET CV AND PROCESS PIPE							
20	EXPANDER / REDUCER BET CV AND CARTRIDGE(IF CATRIDGE IS APPLICABLE)							
21	SMART POSITIONER / POSITION LIMIT SWITCH							
22	POSITION TRANSMITTER / E/P CONVERTER							
23	AIR FILTER REGULATOR / AIR LOCK RELAY							
24	SOLENOID VALVE / JUNCTION BOX							
25	HAND WHEEL (SIDE MOUNTED) / LOCAL POSITIONER INDICATOR							
26	ELECTRO PNEUMATIC POSITIONER							
27	SERVICE CONDITIONS	FLOW (T/HR)	INLET PR KG/CM2(A)	OUTLET PR. KG/CM2(A)	TEMP DEG. C	CALCULATED CV	% VLV LIFT	VALVE O/L VELOCITY
28								
29								
30								
31								
31a								
31b								
31c								
32	BODY DESIGN PRESSURE (KG/CM2 (g)) : TEMP (DEG C)							
33	IBR FORM-IIIC							
34	VALVE TYPE							
D. GUARENTEED PERFORMANCE REQUIREMENTS								
35	LINEARITY / HYSTERISIS / SENSITIVITY / OVERALL ACCURACY	+/- 1%	+/- 1%	+/- 0.5%	+/- 2%			
E. PACKING								
36	AS PER ENCLOSED SPECIFICATION							
F. PAINTING								
37	AS PER ENCLOSED SPECIFICATION							

बी एच ई एल BHEL	TECHNICAL SPECIFICATION & DATA SHEET FOR CONTROL VALVE WITH ACCESSORIES (PNEUMATICALLY OPERATED)	Specification No.: PE-TS-497-145-H104 Rev. No. 00 Date :30.12.24

COMPLIANCE CERTIFICATE

1	It is hereby confirmed that the technical specification (sheet 1 to 57) has been read and understood. We confirm compliance to the tender specification including any prebid clarification and amendments issued prior to techno-commercial bid opening without any deviation.
2	It is hereby declared that any technical submittal which was not specifically asked by BHEL in NIT shall not to be considered as part of bid and shall not be evaluated by BHEL.

Signature of authorised Representative :

Name and Designation :

Name & Address of the Bidder :

Date :

UNPRICED FORMAT

2 X 800 MW LARA TPS STAGE-II
CONTROL VALVES (OTHER THAN FDV-14)

SCHEDULE OF PRICES

BILL OF QUANTITY - MAIN SUPPLY

[A]	CONTROL VALVES COMPLETE WITH POSITIONER AND ALL ACCESSORIES MOUNTED, TUBED AND TERMINATED ON JB						
SR. NO.	TAG NOS.	SERVICE	QTY/UNIT	QTY FOR TWO UNITS	UOM	UNIT EX-WORKS	TOTAL EX-WORKS
1	ASV-8	D/A PEGGING FROM AUX. STEAM HEADER	1	2	NOS		
2	CRHV-6	D/A PEGGING FROM CRH LINE	1	2	NOS		
3	CDV-25	LOW LOAD CONDENSATE CONTROL	1	2	NOS		
4	CDV-39	GSC/CEP MIN. FLOW RECIRCULATION	1	2	NOS		
5	CDV-65	CEP-A MIN. FLOW RECIRCULATION	1	2	NOS		
6	CDV-67	CEP-B MIN. FLOW RECIRCULATION	1	2	NOS		
7	CDV-69	CEP-C MIN. FLOW RECIRCULATION	1	2	NOS		
8	CDV-43	EXCESS DUMP CONTROL	1	2	NOS		
9	CDV-72	CONDENSATE FOR VALVE GLAND SEALING & F/T	1	2	NOS		
10	CDV-84	CONDENSATE SPRAY FOR F/T	1	2	NOS		
11	CDV-94	CONDENSATE SPRAY FOR UNIT F/T	1	2	NOS		
12	DRV-53	HPH-9A NORMAL DRAIN TO HPH-8A	1	2	NOS		
13	DRV-59	HPH-9B NORMAL DRAIN TO HPH-8B	1	2	NOS		
14	DRV-56	HPH-9A ALT DRAIN TO F/T	1	2	NOS		
15	DRV-62	HPH-9B ALT DRAIN TO F/T	1	2	NOS		
16	DRV-2	HPH-8A NORMAL DRAIN TO HPH-7A	1	2	NOS		
17	DRV-8	HPH-8B NORMAL DRAIN TO HPH-7B	1	2	NOS		
18	DRV-5	HPH-8A ALT DRAIN TO F/T	1	2	NOS		
19	DRV-11	HPH-8B ALT DRAIN TO F/T	1	2	NOS		
20	DRV-15	HPH-7A NORMAL DRAIN TO DEAERATOR	1	2	NOS		
21	DRV-22	HPH-7B NORMAL DRAIN TO DEAERATOR	1	2	NOS		
22	DRV-18	HPH-7A ALT DRAIN TO F/T	1	2	NOS		
23	DRV-25	HPH-7B ALT DRAIN TO F/T	1	2	NOS		
24	DRV-82	LPH-5 NORMAL DRAIN TO LPH-4	1	2	NOS		
25	DRV-85	LPH-5 ALT. DRAIN TO F/T-B	1	2	NOS		
26	DRV-65	LPH-4 NORMAL DRAIN TO LPH-3	1	2	NOS		
27	DRV-68	LPH-4 ALT. DRAIN TO F/T-B	1	2	NOS		
28	DRV-77	DRIP PUMP DISCHARGE CONTROL	1	2	NOS		
29	DRV-31	LPH-3 ALT. DRAIN TO F/T-B	1	2	NOS		
30	DRV-48	DEAERATOR OVERFLOW TO F/T-B	1	2	NOS		
31	DMV-43	NORMAL DM MU TO HOTWELL	1	2	NOS		
32	DMV-78	EMERGENCY DM MU TO HOTWELL	1	2	NOS		
33	ASV-16	DRAIN OF AUX STEAM FROM EXISTING UNIT HEADER TO UNIT F/T	1	1	NOS		
34	DMCWSG12	DMCW SYSTEM FOR SG AUX'S	1	2	NOS		
35	DMCW18	DMCW SYSTEM FOR TG AUX'S	1	2	NOS		
		TOTAL =	**35**	**69**	**NOS**		
[B]	**1/4 " SS TUBING (12 METER FOR EACH TAG)**			828	MTR		
[C]	**SS FITTINGS- FOR EACH TAG**						
1	SS FITTINGS for connection to Air Filter Regulator- FOR EACH TAG		1	2	LOT		
2	SS FITTINGS for connection to Air Lock Relay- FOR EACH TAG		1	2	LOT		
3	SS FITTINGS for connection to IA Header Isolation Valve - FOR EACH TAG		1	2	LOT		
4	SS EQUAL TEE - FOR EACH TAG		1	2	LOT		
5	SS 1/2 " NPT(M) X 1/4 " OD TUBE CONNECTOR- FOR EACH TAG		1	2	LOT		
[D]	**COMMISSIONING SPARES (Gaskets & Gland Packing set for each valve)**		35	69	SETS		
[E]	**VALVE DIAGNOSTIC AND CONFIGURATION SOFTWARE**		1	2	NOS		
[F]	**CV TEST CHARGES**		1	1	LOT		

UNPRICED FORMAT

BILL OF QUANTITY - MANDATORY SPARES				
SL NO	ITEM DESCRIPTION	QTY FOR STATION	UNIT EX-WORKS	TOTAL EX-WORKS
1	**Mandatory Spares for SG DMCW valve**			
1.1	Pneumatic and electro-hydraulic actuator assembly (or equivalent item applicable for selected Actuator Type shall be provided)	1 No. of each type, model and rating		
1.2	Diaphragms, O' rings, seals etc.	5 Nos. of all types make etc.		
1.3	Solenoid valves (if applicable)	1 No. of each type		
1.4	Smart positioners (complete unit) & accessories (link assembly)	2 Nos. of each type, model and rating		
1.5	Pneumatic air-filter/Regulator	2 Nos. of each type, make rating etc.		
1.6	Air lock relays	1 No. of each type, model and rating		
1.7	Valve trim (including cage, plug, stem, seat rings, guide bushings etc.)	1 set for each type,class,size of control valve		
1.8	Gland Packing	5 Sets		
1.9	Gaskets	5 Sets		
2	**Mandatory Spares for CEP min recirculation valve**			
2.1	CEP recirculation valve trim which includes spindle with cone, seat ring, guide bush, cage	1 Set		
2.2	CEP recirculation valve soft parts i.e. gland packing, seals, O-rings, gaskets etc.	3 Sets		
3	**Mandatory Spares for Process Connection Piping**			
3.1	FITTINGS			
3.1.1	SS FITTINGS for connection to Air Filter Regulator- FOR EACH TAG	100 nos. of each type		
3.1.2	SS FITTINGS for connection to Air Lock Relay- FOR EACH TAG	100 nos. of each type		
3.1.3	SS FITTINGS for connection to IA Header Isolation Valve- FOR EACH TAG	100 nos. of each type		
3.1.4	SS EQUAL TEE- FOR EACH TAG	100 nos. of each type		
3.2	Pneumatic air-filter/Regulator	20 nos. of each type and model		
3.3	Valves of all types(like Equalising Valves, Exhaust Valves, etc.)	20 nos. of each type and model		

Notes - Technical Specification to be referred for calculating the spares' quantity

UNPRICED FORMAT

2 X 800 MW NTPC SINGRAULI TPP STAGE-III EPC
CONTROL VALVES (OTHER THAN FDV-14)

SCHEDULE OF PRICES

BILL OF QUANTITY - MAIN SUPPLY

[A]	CONTROL VALVES COMPLETE WITH POSITIONER AND ALL ACCESSORIES MOUNTED, TUBED AND TERMINATED ON JB						
SR. NO.	TAG NOS.	SERVICE	QTY/UNIT	QTY FOR TWO UNITS	UOM	UNIT EX-WORKS	TOTAL EX-WORKS
1	ASV-8	D/A PEGGING FROM AUX. STEAM HEADER	1	2	NOS		
2	CRHV-6	D/A PEGGING FROM CRH LINE	1	2	NOS		
3	CDV-25	LOW LOAD CONDENSATE CONTROL	1	2	NOS		
4	CDV-39	GSC/CEP MIN. FLOW RECIRCULATION	1	2	NOS		
5	CDV-65	CEP-A MIN. FLOW RECIRCULATION	1	2	NOS		
6	CDV-67	CEP-B MIN. FLOW RECIRCULATION	1	2	NOS		
7	CDV-69	CEP-C MIN. FLOW RECIRCULATION	1	2	NOS		
8	CDV-43	EXCESS DUMP CONTROL	1	2	NOS		
9	CDV-72	CONDENSATE FOR VALVE GLAND SEALING & F/T	1	2	NOS		
10	CDV-84	CONDENSATE SPRAY FOR F/T	1	2	NOS		
11	CDV-94	CONDENSATE SPRAY FOR UNIT F/T	1	2	NOS		
12	DRV-53	HPH-9A NORMAL DRAIN TO HPH-8A	1	2	NOS		
13	DRV-59	HPH-9B NORMAL DRAIN TO HPH-8B	1	2	NOS		
14	DRV-56	HPH-9A ALT DRAIN TO F/T	1	2	NOS		
15	DRV-62	HPH-9B ALT DRAIN TO F/T	1	2	NOS		
16	DRV-2	HPH-8A NORMAL DRAIN TO HPH-7A	1	2	NOS		
17	DRV-8	HPH-8B NORMAL DRAIN TO HPH-7B	1	2	NOS		
18	DRV-5	HPH-8A ALT DRAIN TO F/T	1	2	NOS		
19	DRV-11	HPH-8B ALT DRAIN TO F/T	1	2	NOS		
20	DRV-15	HPH-7A NORMAL DRAIN TO DEAERATOR	1	2	NOS		
21	DRV-22	HPH-7B NORMAL DRAIN TO DEAERATOR	1	2	NOS		
22	DRV-18	HPH-7A ALT DRAIN TO F/T	1	2	NOS		
23	DRV-25	HPH-7B ALT DRAIN TO F/T	1	2	NOS		
24	DRV-82	LPH-5 NORMAL DRAIN TO LPH-4	1	2	NOS		
25	DRV-85	LPH-5 ALT. DRAIN TO F/T-B	1	2	NOS		
26	DRV-65	LPH-4 NORMAL DRAIN TO LPH-3	1	2	NOS		
27	DRV-68	LPH-4 ALT. DRAIN TO F/T-B	1	2	NOS		
28	DRV-77	DRIP PUMP DISCHARGE CONTROL	1	2	NOS		
29	DRV-31	LPH-3 ALT. DRAIN TO F/T-B	1	2	NOS		
30	DRV-48	DEAERATOR OVERFLOW TO F/T-B	1	2	NOS		
31	DMV-43	NORMAL DM MU TO HOTWELL	1	2	NOS		
32	DMV-78	EMERGENCY DM MU TO HOTWELL	1	2	NOS		
33	ASV-16	DRAIN OF AUX STEAM FROM EXISTING UNIT HEADER TO UNIT F/T	1	1	NOS		
34	ASV-16A	AUX STEAM FROM EXISTING UNIT HEADER	1	1	NOS		
35	DMCWSG12	DMCW SYSTEM FOR SG AUX'S	1	2	NOS		
36	DMCW18	DMCW SYSTEM FOR TG AUX'S	1	2	NOS		
		TOTAL =	**36**	**70**	**NOS**		
[B]	**1/4 " SS TUBING (12 METER FOR EACH TAG)**			**840**	**MTR**		
[C]	**SS FITTINGS- FOR EACH TAG**						
1	SS FITTINGS for connection to Air Filter Regulator- FOR EACH TAG		1	2	LOT		
2	SS FITTINGS for connection to Air Lock Relay- FOR EACH TAG		1	2	LOT		
3	SS FITTINGS for connection to IA Header Isolation Valve - FOR EACH TAG		1	2	LOT		
4	SS EQUAL TEE - FOR EACH TAG		1	2	LOT		
5	SS 1/2 " NPT(M) X 1/4 " OD TUBE CONNECTOR- FOR EACH TAG		1	2	LOT		
[D]	**COMMISSIONING SPARES (Gaskets & Gland Packing set for each valve)**		36	70	SETS		
[E]	**VALVE DIAGNOSTIC AND CONFIGURATION SOFTWARE**		1	2	NOS		
[F]	**CV TEST CHARGES**		1	1	LOT		

BILL OF QUANTITY - MANDATORY SPARES

SL NO	ITEM DESCRIPTION	QTY FOR STATION	UNIT EX-WORKS	TOTAL EX-WORKS
1	**Mandatory Spares for SG DMCW valve**			
1.1	Pneumatic and electro-hydraulic actuator assembly (or equivalent item applicable for selected Actuator Type shall be provided)	1 No. of each type, model and rating		
1.2	Diaphragms, O' rings, seals etc.	5 Nos. of all types make etc.		
1.3	Solenoid valves (if applicable)	1 No. of each type		
1.4	Smart positioners (complete unit) & accessories (link assembly)	2 Nos. of each type, model and rating		
1.5	Pneumatic air-filter/Regulator	2 Nos. of each type, make rating etc.		

UNPRICED FORMAT

1.6	Air lock relays	1 No. of each type, model and rating		
1.7	Valve trim (including cage, plug, stem, seat rings, guide bushings etc.)	1 set for each each type, class, size of control valve.		
1.8	Gland Packing	5 Sets		
1.9	Gaskets	5 Sets		
2	**Mandatory Spares for CEP min recirculation valve**			
2.1	CEP recirculation valve trim which includes spindle with cone, seat ring, guide bush, cage	1 Set		
2.2	CEP recirculation valve soft parts i.e. gland packing, seals, O-rings, gaskets etc.	3 Sets		
3	**Mandatory Spares for Process Connection Piping**			
3.1	FITTINGS			
3.1.1	SS FITTINGS for connection to Air Filter Regulator- FOR EACH TAG	100 nos. of each type		
3.1.2	SS FITTINGS for connection to Air Lock Relay- FOR EACH TAG	100 nos. of each type		
3.1.3	SS FITTINGS for connection to IA Header Isolation Valve- FOR EACH TAG	100 nos. of each type		
3.1.4	SS EQUAL TEE- FOR EACH TAG	100 nos. of each type		
3.2	Pneumatic air-filter/Regulator	20 nos. of each type and model		
3.3	Valves of all types(like Equalising Valves, Exhaust Valves, etc.)	20 nos. of each type and model		

Notes - Technical Specification to be referred for calculating the spares' quantity

UNPRICED FORMAT

2 X 660 MW NTPC TALCHER TPP STAGE-III
CONTROL VALVES (OTHER THAN FDV-14)

SCHEDULE OF PRICES

BILL OF QUANTITY - MAIN SUPPLY

[A]	CONTROL VALVES COMPLETE WITH POSITIONER AND ALL ACCESSORIES MOUNTED, TUBED AND TERMINATED ON JB						
SR. NO.	TAG NOS.	SERVICE	QTY/UNIT	QTY FOR TWO UNITS	UOM	UNIT EX-WORKS	TOTAL EX-WORKS
1	ASV-8	D/A PEGGING FROM AUX. STEAM HEADER	1	2	NOS		
2	CRHV-6	D/A PEGGING FROM CRH LINE	1	2	NOS		
3	CDV-25	LOW LOAD CONDENSATE CONTROL	1	2	NOS		
4	CDV-39	GSC/CEP MIN. FLOW RECIRCULATION	1	2	NOS		
5	CDV-65	CEP-A MIN. FLOW RECIRCULATION	1	2	NOS		
6	CDV-67	CEP-B MIN. FLOW RECIRCULATION	1	2	NOS		
7	CDV-69	CEP-C MIN. FLOW RECIRCULATION	1	2	NOS		
8	CDV-43	EXCESS DUMP CONTROL	1	2	NOS		
9	CDV-72	CONDENSATE FOR VALVE GLAND SEALING & F/T	1	2	NOS		
10	CDV-84	CONDENSATE SPRAY FOR F/T	1	2	NOS		
11	CDV-94	CONDENSATE SPRAY FOR UNIT F/T	1	2	NOS		
12	DRV-53	HPH-9A NORMAL DRAIN TO HPH-8A	1	2	NOS		
13	DRV-59	HPH-9B NORMAL DRAIN TO HPH-8B	1	2	NOS		
14	DRV-56	HPH-9A ALT DRAIN TO F/T	1	2	NOS		
15	DRV-62	HPH-9B ALT DRAIN TO F/T	1	2	NOS		
16	DRV-2	HPH-8A NORMAL DRAIN TO HPH-7A	1	2	NOS		
17	DRV-8	HPH-8B NORMAL DRAIN TO HPH-7B	1	2	NOS		
18	DRV-5	HPH-8A ALT DRAIN TO F/T	1	2	NOS		
19	DRV-11	HPH-8B ALT DRAIN TO F/T	1	2	NOS		
20	DRV-15	HPH-7A NORMAL DRAIN TO DEAERATOR	1	2	NOS		
21	DRV-22	HPH-7B NORMAL DRAIN TO DEAERATOR	1	2	NOS		
22	DRV-18	HPH-7A ALT DRAIN TO F/T	1	2	NOS		
23	DRV-25	HPH-7B ALT DRAIN TO F/T	1	2	NOS		
24	DRV-82	LPH-5 NORMAL DRAIN TO LPH-4	1	2	NOS		
25	DRV-85	LPH-5 ALT. DRAIN TO F/T-B	1	2	NOS		
26	DRV-65	LPH-4 NORMAL DRAIN TO LPH-3	1	2	NOS		
27	DRV-68	LPH-4 ALT. DRAIN TO F/T-B	1	2	NOS		
28	DRV-77	DRIP PUMP DISCHARGE CONTROL	1	2	NOS		
29	DRV-31	LPH-3 ALT. DRAIN TO F/T-B	1	2	NOS		
30	DRV-48	DEAERATOR OVERFLOW TO F/T-B	1	2	NOS		
31	DMV-43	NORMAL DM MU TO HOTWELL	1	2	NOS		
32	DMV-78	EMERGENCY DM MU TO HOTWELL	1	2	NOS		
33	DMCWSG8	DMCW SYSTEM FOR SG AUX'S	1	2	NOS		
34	DMCW18	DMCW SYSTEM FOR TG AUX'S	1	2	NOS		
		TOTAL =	34	68	NOS		
[B]	1/4 " SS TUBING (12 METER FOR EACH TAG)			816	MTR		
[C]	SS FITTINGS- FOR EACH TAG						
1	SS FITTINGS for connection to Air Filter Regulator- FOR EACH TAG		1	2	LOT		
2	SS FITTINGS for connection to Air Lock Relay- FOR EACH TAG		1	2	LOT		
3	SS FITTINGS for connection to IA Header Isolation Valve - FOR EACH TAG		1	2	LOT		
4	SS EQUAL TEE - FOR EACH TAG		1	2	LOT		
5	SS 1/2 " NPT(M) X 1/4 " OD TUBE CONNECTOR- FOR EACH TAG		1	2	LOT		
[D]	COMMISSIONING SPARES (Gaskets & Gland Packing set for each valve)		34	68	SETS		
[E]	VALVE DIAGNOSTIC AND CONFIGURATION SOFTWARE		1	2	NOS		
[F]	CV TEST CHARGES		1	1	LOT		

BILL OF QUANTITY - MANDATORY SPARES

SL NO	ITEM DESCRIPTION	QTY FOR STATION	UNIT EX-WORKS	TOTAL EX-WORKS
1	**Mandatory Spares for SG DMCW valve**			
1.1	Pneumatic and electro-hydraulic actuator assembly (or equivalent item applicable for selected Actuator Type shall be provided)	1 No. of each type, model and rating		
1.2	Diaphragms, O' rings, seals etc.	5 Nos. of all types make etc.		
1.3	Solenoid valves (if applicable)	1 No. of each type		
1.4	Smart positioners (complete unit) & accessories (link assembly)	2 Nos. of each type, model and rating		
1.5	Pneumatic air-filter/Regulator	2 Nos. of each type, make rating etc.		
1.6	Air lock relays	1 No. of each type, model and rating		

UNPRICED FORMAT

1.7	Valve trim (including cage, plug, stem, seat rings, guide bushings etc.)	1 set for each type,class,size of control valve		
1.8	Gland Packing	5 Sets		
1.9	Gaskets	5 Sets		
2	**Mandatory Spares for CEP min recirculation valve**			
2.1	CEP recirculation valve trim which includes spindle with cone, seat ring, guide bush, cage	1 Set		
2.2	CEP recirculation valve soft parts i.e. gland packing, seals, O-rings, gaskets etc.	3 Sets		
3	**Mandatory Spares for Process Connection Piping**			
3.1	FITTINGS			
3.1.1	SS FITTINGS for connection to Air Filter Regulator- FOR EACH TAG	100 nos. of each type		
3.1.2	SS FITTINGS for connection to Air Lock Relay- FOR EACH TAG	100 nos. of each type		
3.1.3	SS FITTINGS for connection to IA Header Isolation Valve- FOR EACH TAG	100 nos. of each type		
3.1.4	SS EQUAL TEE- FOR EACH TAG	100 nos. of each type		
3.2	Pneumatic air-filter/Regulator	20 nos. of each type and model		
3.3	Valves of all types(like Equalising Valves, Exhaust Valves, etc.)	20 nos. of each type and model		

Notes - Technical Specification to be referred for calculating the spares' quantity

ANNEXURE– VIII

INTEGRITY PACT

Between

Bharat Heavy Electricals Ltd. (BHEL), a company registered under the Companies Act 1956 and having its registered office at "BHEL House", Siri Fort, New Delhi – 110049 (India) hereinafter referred to as "The Principal", which expression unless repugnant to the context or meaning hereof shall include its successors or assigns of the ONE PART

and

_____, (description of the party along with address), hereinafter referred to as "The Bidder/ Contractor" which expression unless repugnant to the context or meaning hereof shall include its successors or assigns of the OTHER PART

Preamble

The Principal intends to award, under laid-down organizational procedures, contract/s for _____ _____. The Principal values full compliance with all relevant laws of the land, rules and regulations, and the principles of economic use of resources, and of fairness and transparency in its relations with its Bidder(s)/ Contractor(s).

In order to achieve these goals, the Principal will appoint Independent External Monitor(s), who will monitor the tender process and the execution of the contract for compliance with the principles mentioned above.

Section 1 – Commitments of the Principal

1.1 The Principal commits itself to take all measures necessary to prevent corruption and to observe the following principles: -

1.1.1 No employee of the Principal, personally or through family members, will in connection with the tender for, or the execution of a contract, demand, take a promise for or accept, for self or third person, any material or immaterial benefit which the person is not legally entitled to.

1.1.2 The Principal will, during the tender process treat all Bidder(s) with equity and reason. The Principal will in particular, before and during the tender process, provide to all Bidder(s) the same information and will not provide to any Bidder(s) confidential / additional information through which the Bidder(s) could obtain an advantage in relation to the tender process or the contract execution.

1.1.3 The Principal will exclude from the process all known prejudiced persons.

1.2 If the Principal obtains information on the conduct of any of its employees which is a penal offence under the Indian Penal Code 1860 and Prevention of Corruption Act 1988 or any other statutory penal enactment, or if there be a substantive suspicion in this regard, the Principal will inform its Vigilance Office and in addition can initiate disciplinary actions.

Section 2 – Commitments of the Bidder(s)/ Contractor(s)

2.1 The Bidder(s)/ Contractor(s) commit himself to take all measures necessary to prevent corruption. He commits

himself to observe the following principles during his participation in the tender process and during the contract execution.

2.1.1 The Bidder(s)/ Contractor(s) will not, directly or through any other person or firm, offer, promise or give to the Principal or to any of the Principal's employees involved in the tender process or the execution of the contract or to any third person any material, immaterial or any other benefit which he / she is not legally entitled to, in order to obtain in exchange any advantage of any kind whatsoever during the tender process or during the execution of the contract.

2.1.2 The Bidder(s)/ Contractor(s) will not enter with other Bidder(s) into any illegal or undisclosed agreement or understanding, whether formal or informal. This applies in particular to prices, specifications, certifications, subsidiary contracts, submission or non-submission of bids or any other actions to restrict competitiveness or to introduce cartelization in the bidding process.

2.1.3 The Bidder(s)/ Contractor(s) will not commit any penal offence under the relevant IPC/ PC Act; further the Bidder(s)/ Contractor(s) will not use improperly, for purposes of competition or personal gain, or pass on to others, any information or document provided by the Principal as part of the business relationship, regarding plans, technical proposals and business details, including information contained or transmitted electronically.

2.1.4 Foreign Bidder(s)/ Contractor(s) shall disclose the name and address of agents and representatives in India and Indian Bidder(s)! Contractor(s) to disclose their foreign principals or associates. The Bidder(s)/ Contractor(s) will, when presenting his bid, disclose any and all payments he has made, and is committed to or intends to make to agents, brokers or any other intermediaries in connection with the award of the contract.

2.2 The Bidder(s)/ Contractor(s) will not instigate third persons to commit offences outlined above or be an accessory to such offences.

2.3 The Bidder(s)/ Contractor(s) shall not approach the Courts while representing the matters to IEMs and will await their decision in the matter.

Section 3 – Disqualification from tender process & exclusion from future contracts

If the Bidder(s)/ Contractor(s), before award or during execution has committed a transgression through a violation of Section 2 above, or acts in any other manner such as to put his reliability or credibility in question, the Principal is entitled to disqualify the Bidder(s)/ Contractor(s) from the tender process or take action as per the separate "Guidelines on Banning of Business dealings with Suppliers/ Contractors". framed by the Principal.

Section 4 – Compensation for Damages

4.1 If the Principal has disqualified the Bidder from the tender process prior to the award according to Section 3, the Principal is entitled to demand and recover the damages equivalent Earnest Money Deposit/Bid Security.

4.2 If the Principal has terminated the contract according to Section 3, or if the Principal is entitled to terminate the contract according to section 3, the Principal shall be entitled to demand and recover from the Contractor liquidated damages equivalent to 5% of the contract value or the amount equivalent to Security Deposit/Performance Bank Guarantee, whichever is higher.

Section 5 – Previous Transgression

5.1 The Bidder declares that no previous transgressions occurred in the last 3 years with any other company in any country conforming to the anti-corruption approach or with any other Public Sector Enterprise in India that could justify his exclusion from the tender process.

5.2 If the Bidder makes incorrect statement on this subject, he can be disqualified from the tender process or the contract, if already awarded, can be terminated for such reason.

Section 6 – Equal treatment of all Bidders/ Contractors/ Sub-contractors

6.1 The Principal will enter into agreements with identical conditions as this one with all Bidders and Contractors. In case of sub-contracting, the Principal contractor shall be responsible for the adoption of IP by his sub-contractors and shall continue to remain
responsible for any default by his sub-contractors.

6.2 The Principal will disqualify from the tender process all bidders who do not sign this pact or violate its provisions.

Section 7 – Criminal Charges against violating Bidders / Contractors / Sub-contractors

If the Principal obtains knowledge of conduct of a Bidder, Contractor or Subcontractor, or of an employee or a representative or an associate of a Bidder, Contractor or Subcontractor which constitutes corruption, or if the Principal has substantive suspicion in this regard, the Principal will inform the Vigilance Office.

Section 8 –Independent External Monitor(s)

8.1 The Principal appoints competent and credible Independent External Monitor for this Pact. The task of the Monitor is to review independently and objectively, whether and to what extent the parties comply with the obligations under this agreement.

8.2 The Monitor is not subject to instructions by the representatives of the parties and performs his functions neutrally and independently. He reports to the CMD, BHEL.

8.3 The Bidder(s)/ Contractor(s) accepts that the Monitor has the right to access without restriction to all contract documentation of the Principal including that provided by the Bidder(s)/ Contractor(s). The Bidder(s)/ Contractor(s) will grant the monitor, upon his request and demonstration of a valid interest, unrestricted and unconditional access to his contract documentation. The same is applicable to Sub-contractor(s). The Monitor is under contractual obligation to treat the information and documents of the Bidder(s)/ Contractor(s) / Sub-contractor(s) with confidentiality in line with Non-disclosure agreement.

8.4 The Principal will provide to the Monitor sufficient information about all meetings among the parties related to the contract provided such meetings could have an impact on the contractual relations between the Principal and the Contractor. The parties offer to the Monitor the option to participate in such meetings.

8.5 The role of IEMs is advisory, would not be legally binding and it is restricted to resolving issues raised by an intending bidder regarding any aspect of the tender which allegedly restricts competition or bias towards some bidders. At the same time, it must be understood that IEMs are not consultants to the Management. Their role is independent in nature and the advice once tendered would not be subject to review at the request of the organization.

8.6 For ensuring the desired transparency and objectivity in dealing with the complaints arising out of any tendering process, the matter should be examined by the full panel of IEMs jointly as far as possible, who would look into the records, conduct an investigation, and submit their joint recommendations to the Management.

8.7 The IEMs would examine all complaints received by them and give their recommendations! views to CMD, BHEL, at the earliest. They may also send their report directly to the CVO and the Commission, in case of suspicion of serious

irregularities requiring legal! administrative action. IEMs will tender their advice on the complaints within 10 days as far as possible.

8.8 The CMD, BHEL shall decide the compensation to be paid to the Monitor and its terms and conditions.

8.9 IEM should examine the process integrity, they are not expected to concern themselves with fixing of responsibility of officers. Complaints alleging mala fide on the part of any officer of the organization should be looked into by the CVO of the concerned organization.

8.10 If the Monitor has reported to the CMD, BHEL, a substantiated suspicion of an offence under relevant Indian Penal Code! Prevention of Corruption Act, and the CMD, BHEL has not, within reasonable time, taken visible action to proceed against such offence or reported it to the Vigilance Office, the Monitor may also transmit this information directly to the Central Vigilance Commissioner, Government of India.

8.11 The number of Independent External Monitor(s) shall be decided by the CMD, BHEL.

8.12 The word 'Monitor' would include both singular and plural.

Section 9 – Pact Duration

9.1 This Pact shall be operative from the date IP is signed by both the parties till the final completion of contract for successful bidder and for all other bidders 6 months after the contract has been awarded. Issues like warranty! guarantee etc. should be outside the purview of IEMs.

9.2 If any claim is made / lodged during this time, the same shall be binding and continue to be valid despite the lapse of this pact as specified as above, unless it is discharged/ determined by the CMD, BHEL.

Section 10 – Other Provisions

10.1 This agreement is subject to Indian Laws and jurisdiction shall be registered office of the Principal, i.e. New Delhi.

10.2 Changes and supplements as well as termination notices need to be made in writing. Side agreements have not been made.

10.3 If the Contractor is a partnership or a consortium, this agreement must be signed by all partners or consortium members.

10.4 Should one or several provisions of this agreement turn out to be invalid, the remainder of this agreement remains valid. In this case, the parties will strive to come to an agreement to their original intentions.

10.5 Only those bidders/ contractors who have entered into this agreement with the Principal would be competent to participate in the bidding. In other words, entering into this agreement would be a preliminary qualification.

Sharad Chandra

Digitally signed by Sharad Chandra
DN: cn=Sharad Chandra, o=BHEL, ou=PEM, email=sharadchandra@bhel.in, c=IN
Date: 2024.09.30 10:35:00 +05'30'

----------	----------
For & On behalf of the Principal	For & On behalf of the Bidder/ Contractor
(Office Seal)	(Office Seal)

Place----------

Date----------

Witness: _____	Witness: _____
(Name & Address) _____	(Name & Address)_____